FRANCE PARATONNERRES

OUR RELIABILITY IS YOUR FIRST INSURANCE

CATALOGUE

IONIFLASHMACH®

Early Streamer Emission Air Terminal

French patent, Technology and Production

Qualifoudre

Edition 2018

“The quality of a team

ready to help you“

Contents

France Paratonnerres

Early Streamer Emission Air-terminals. The IONIFLASH MACH® technology

Our products for the Direct Lightning Protection

Our products for the Indirect Lightning Protection

Prevention Range

Accessories

Certifications

France Paratonnerres / Our services

General Information about Lightning

*Non-contractual pictures

France Paratonnerres

> They placed their trust in us >


Cableship


Chenonceau Castle

Université Embry-Riddle - Floride

Tower of Belem - Portugal



RTV Ecuador In Ecuador


Pluspétrol In Peru


Launch Pad - Kourou (Guyana)


Mine - Ouganda

> They placed their trust in us >


Eiffel Tower in Paris


Satu Mare Church, Romania


Forbidden City, Beijing


Chamber of Commerce, Tripoli

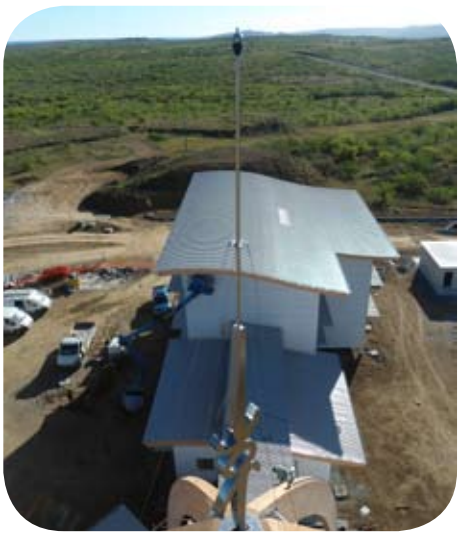
Business Centre, New Caledonia


Amman Airport, Jordan

France Paratonnerres

France Paratonnerres is a 100% French company, based in **the Ester Technopole site** in Limoges. (1h by plane from Paris)

France Paratonnerres capitalising on more than 40 years of research in laboratories and field experiences, of development and of production of high technology devices in lightning protection

Its equipments are installed in more than 70 countries in more than one thousand of sites, with a field experience of the most liability, thanks to its technologic choice.

Our company is registered and certified by **Bureau Veritas**, according to the **ISO 9001** 2015 Version.

Our procedures, our products and our staff are certified and authorized with respect to the requirements of the **QUALIFOUDRE** certification (approved by the ministry)

> For you, France Paratonnerres it's

A well-known scientific actor

Nominated among the world best scientific hopes for its work and publications, the team of research of our firm is invited and lecturer in numerous world-renowned conferences.

Its work is based on laboratory and in-situ tests, observations and results which allowed to characterize the attachment phenomenon of lightning, and therefore optimize the protection systems of the induced phenomenon.

At the root of the last worldwide patent **IONIFLASH MACH®**, **France Paratonnerres** is proud of the reliability of its expertise, and the sustainability of its solutions.

Actor in the scientific research

France Paratonnerres

> France Paratonnerres leads

A department of very high quality

Our organisation insures you:

- the same interlocutor, trilingual with a pointed follow-up of your commercial and technical projects
- An answering time, lower than 24h for your consultation
- A deadline of load from 24 to 48 hours for all your orders

A quality guaranteed by big brands

FRANCE PARATONNERRES IONIFLASHMACH® IONICOUNT®

And implemented by a quality management in all the technical operations

- Reception and control of all the entering materials
- Certificates of compliance material
- Traceability of every component
- Individual control of every device in several stages of the production
- Recording of the statements, the analysis of the events
- Since the origin of the raw material, manufacturing of the part, and the final conception, each component is treat , verify, tested and individually registered.

A social and human politic

France Paratonnerres lead a politic which cares of the well-being of its employees and of the environment. Mindful of the regulatory obligations and current laws, creating a work environment ideal for the development and the blossoming of the relations between its partners.

Early Streamer Emision Air-Terminal The IONIFLASH MACH® technology

Early Streamer Emission Air Terminals / IONIFLASH MACH® Technology

> The IONIFLASH MACH®

■ The IONIFLASH MACH® range (early streamer emission air terminal)

A complete and well scaled range from 15 to 60 µs of Early Streamer Emission times, in order to answer in the most adapted way to each needs

IONIFLASH MACH®	Mach NG15	Mach NG25	Mach NG30	Mach NG45	Mach NG60
A high level of early streamer emission time Δt	55 µs	78 µs	87 µs	114 µs	135 µs
Standard deviation ratio : K	0,61	0,76	0,74	0,44	0,29

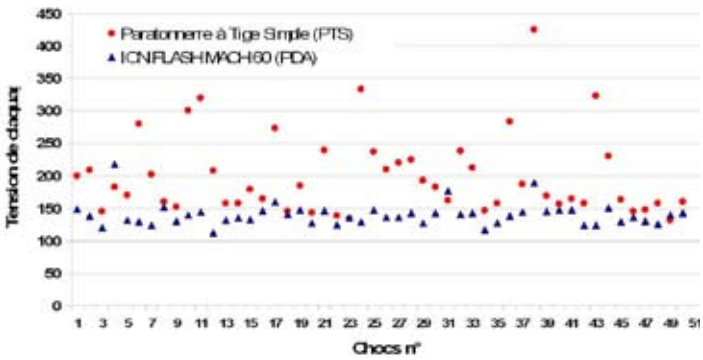

- Very low dispersion of its performances
- Functioning well adapted to the lightning frequency range (0 to 10 MHz)
- Is not sensible to bad weather with its internal spark gap
- Two spark gaps proportioned in order to have an adapted range of working and this, whatever the meteorological conditions are. (rain, snow, hail…)
- No electronic device > No energy consumption
- Electrostatic activation of the streamer emission device during the increase of electromagnetic field of the earth
- No fragile component > Metallic parts in Stainless steel 316 L
- Functioning still optimum after 2 serial tests with 7 lightning strokes in normalized wave 10/350 µs at 100 kA
- Eco-conception of the **IONIFLASH MACH®** is implemented being concerned by the environment
- Patented technology.
- 10 years Guarantee
- Life duration > 35 years

> The IONIFLASH MACH®

■ Functioning

When the downward leader gets close to the ground (about 100 metres above the point), it generates an electric field above it which increases until 100 kilovolts per metre.

This is when the corona discharge effect takes place, changing suddenly from a position at the tip to an upward leader.

These positive upward leaders suddenly move in the direction of the downward leader. One of the leaders, the closest or the one which has started earlier or the one which has travelled the faster, enters into contact with the downward leader. Then, the ionised air channel is in connection with both the ground and the cloud, and the return stroke can take place, engendering a high lightning current of many kA.

The air terminal **IONIFLASH MACH®** is a device for lightning protection with a spherical metal part fixed to the top. This sphere is insulated from the rod by a ring made from a material with very high electrical insulation properties.

When a storm comes, the external electrode (sphere) charges under the influence of the electric field until the potential reaches a critical value from which a spark appears between the exterior electrode and the tip of the central electrode. The tip enables plasma to be created close by the tip.

The plasma, in association with the intense electric field created close by the tip, constitutes the first stage of development of an upward leader.

The spark produced at the top of the **IONIFLASH MACH®** air terminal will initiate the advance of the discharge, engendering an upward leader moving in the direction of the downward leader.

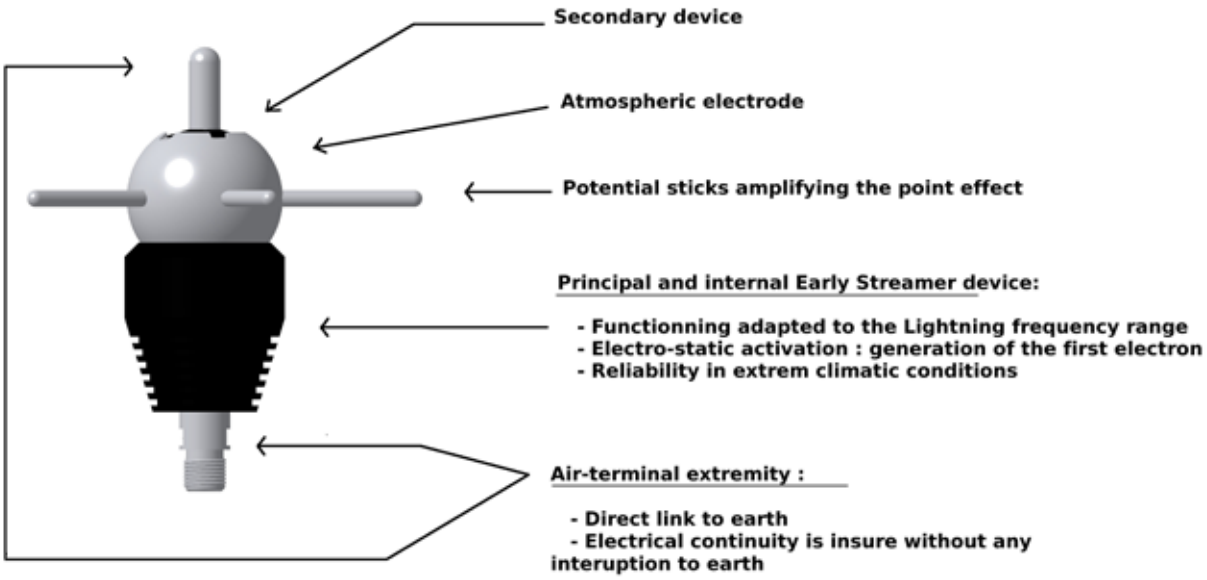

Early Streamer Emission Air Terminals / IONIFLASH MACH® Technology

> Standard and Tests

■ Laboratory Tests

The last edition of the NFC 17-102 standard (2011) Strengthen the tests of requirements with which must be confronted the ESE

A complete sequence of tests is defined in order to confront the **IONIFLASH MACH®** to the whole parameters it will meet in natural condition

• General Tests	Documentation and indentification ↓ Marking tests
• Mechanical Tests	Control of the Dimensions
• Environmental Tests	Salt mist treatment ↓ Humid Sulphurous atmosphere Treatment
• Electrical Tests	Voltage withstanding
• Eficciency Tests	Experimental assembly ↓ Registering of the climatic parameters ↓ Efficiency measurements

■ Homologated in independent

The Early Streamer Emission air terminal **IONIFLASH MACH®** is a non-electronic system. The absence of electronic makes it extremely reliable and easy to install on a very large variety of sites.

In addition, the materials used to make **IONIFLASH MACH®** have been selected for their resistance to both corrosion and very high temperatures.

The **IONIFLASH MACH® ESE** air-terminals have passed the complete sequence of tests of the NFC 17-102 standard (2011). Some tests have been realized in a more severe way than required in order to warranty the most important liability to our products.

Moreover, the good insulation of the **IONIFLASH MACH®** has been tested in rain condition with respect to the IEC 60060-1 standard.

> Standard and Tests >

■ Homologated in independent Laboratories

• **General test**

The engraving laser of the **IONIFLASH MACH®** meets the requirements of marking of the test. It is indelible with time.

• **Mechanical tests**

The continuous axis of the **ESE IONIFLASH MACH®** through which the lightning current passes, presents a minimal section of 200 mm ^{2} according to the requirements of this tests.

• **Environmental tests**

The **IONIFLASH MACH®** have passed the environmental tests:

- Salt mist treatment with a severity of level 2 according to the EN 60068-2-52.

- Humid sulphurous treatment with a 7 cycles sequence according to the EN ISO 6988.

The pollution generated by the test sequence is superficial and doesn't disturb the functioning of the **IONIFLASH MACH®**.

• **Electrical tests**

The **IONIFLASH MACH®**, range has been tested in lightning attachment impact with a 10/350 µs waveform at 100 kA and at 200 kA passes the test requirements.

Indeed,the **IONIFLASH MACH®** has been impacted by 2 series of 7 impacts at 100kA (while the standard requires only 3 impacts), one in negative polarity and one in positive polarity.

The air-terminals show no deterioration or performing, except the parts throught which the current is flowing, where tracks of initiating and fusion appear.

It is important to note that the **IONIFLASH MACH®** has been tested via the attachment method and not with the contact one. Indeed, when the generator electrode is in direct contact with the ESE tip, the spark and the disruption of the air properties isn't generated. In this way, the put under constraint of the ESE's tip isn't realized.

• **Efficiency tests**

Le **ESE IONIFLASH MACH®** is design to reduce the average statistical time associated with the initiating of the upward streamer. This ESE presents an advanced time in comparison with a simple reference rod (PTS) tested in the same conditions. This gain is evaluated in high voltage laboratory

Early Streamer Emission Air Terminals / IONIFLASH MACH® Technology

> Standard and Tests

■ Homologated in independent Laboratories

IONIFLASH MACH®		Mach NG15	Mach NG25	Mach NG30	Mach NG45	Mach NG60
Results on the experimental waveform in laboratory $<T'_{PTS}>$ (µs)	Average reference time of breakdown $<T'_{PTS}>$ (µs)	252	252	186	186	199
	Average reference time of breakdown $<T'_{PDA}>$ (µs)	222	213	150	138	140
	$<T'_{PTS}> - <T'_{PDA}>$	30	39	34	46	59
	Standard deviation $_{PTS}$ (µs)	40	40	43	43	62
	Standard deviation σ_{PDA} (µs)	25	31	32	19	18
	$k = \frac{\sigma_{PDA}}{\sigma_{PTS}}$	0.61	0.76	0,74	0,44	0,29
Weighted early emission time		15 µs	25 µs	30 µs	45 µs	60 µs

During efficiency test, in different high voltage laboratories, the **IONIFLASH MACH®** air-terminal have obtained excellent breakdown time <T'> with very low standard deviation in comparison with the simple reference rod.

- **Insulation test in rain condition**

The **IONIFLASH MACH®** have also been tested in rain conditions

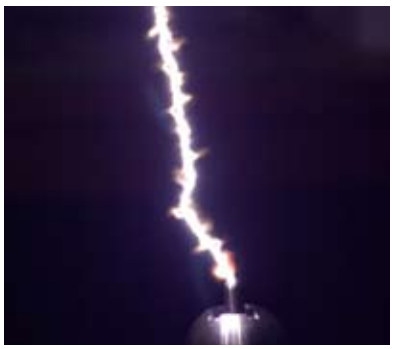

In High voltage laboratories, the breakdown voltage in dry and rain conditions are compared

The **IONIFLASH MACH®** ESE are very well insulated and their working isn't disturb by the rain pollution.

Insulation test are realized both in continuous and impulsed voltage

Moreover, the **IONIFLASH MACH®** have passed insulation tests in rain conditions.

Tests have been performed according to IEC 60060-1 standard protocol. The insulation is greater than 97 %.

> Standard and Tests >

■ In compliance with National and International Standards

This gain in emission time of the upward leader enables a gain in distance of about 60 m compared to a conventional air terminal (by taking into account that average speed of leaders is about 1m/µs).

Thus, the protection of our **IONIFLASH MACH®**, for a surface to be protected, depends on the lightning level of protection determined by the lightning risk evaluation (EN 62305-2), on the height of the tip of the air terminal and on the early streamer emission time (ΔT)

- The **IONIFLASH MACH®** has been tested strictly in respect of the procedures defined in the NFC 17-102 in :

- AMPERE CNRS (National Scientific Research Center) Laboratory in LYON (France)
- Grand Top Europe Laboratory
- Laboratoire de Génie Electrique in PAU (under bailiff's control)
- SHANGHAÏ JIAO TONG Laboratroy (China)
- Laboratoire CPRI BANGALORE (India)
- GERAC Laboratory of LIMOGES (France)
- LCIE Central Laboratory of FONTENAY UAX ROSES (France)
- Assured Testing Laboratory (US)

- TESTED IN COMPLIANCE WITH STANDARDS NFC 17-102 2nd edition September 2011, UNE 21186 Annex C, IEC 62 561, EN62305 and NP4426

■ The IONIFLASH MACH® is tested and analysed in various In situ test

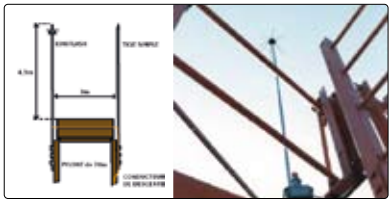

In situ test FT / Puy Beaubier Site – Alt. 879m – June 1987 to June 1988

Hertzian pylon of 70m installed on very impacted site. The **IONIFLASH IF1** and a simple rod were installed at both side of the pylon at the same high.

The results were several impacts on the **IONIFLASH** and none on the Simple rod.

In Situ Test / High Mountain resort – Alt. 1804m – April 2009

The target : to validate the performance of the material used, as well as the behaviour of the **IONIFLASH MACH®** in extreme climatic condictions.

Winds > 150km/h an temperatures from -35°C to 40°C
Installation on a telecommunication pylon (15m high).
The mechanical resitance and in temperature of materials in extreme climatic conditions is perfect.
The lightning strike counter **IONICOUNT®** records the events

In Situ Test / Satu Mare Church (Romania) – June 2011

The target: to observe the earky streamer emission of the **IONIFLASH MACH®** facing a simple rod both installed in the same conditions.

The church has two spires: the **IONIFLASH MACH®** and the simple rod are installed in identical conditions.

The lightning strike counter **IONICOUNT®** records the events

Early Streamer Emission Air Terminals / IONIFLASH MACH® Technology

> Protection Radius

■ Radius of Protection of the IONIFLASH MACH®

The radius of protection (Rp) of an E.S.E. air-terminal depends on its height (h) in relation to the surface to be protected, its early streamer emission time (Δt) and the level of protection (Lp) chosen.

$$Rp = \sqrt{h(2D - h) + \Delta L(2D + \Delta L)} \text{ for } h \geq 5m$$

$$Rp\ (h) = h \times \frac{Rp(5)}{5} \text{ for } 2 \leq h \leq 5m \ (2)$$

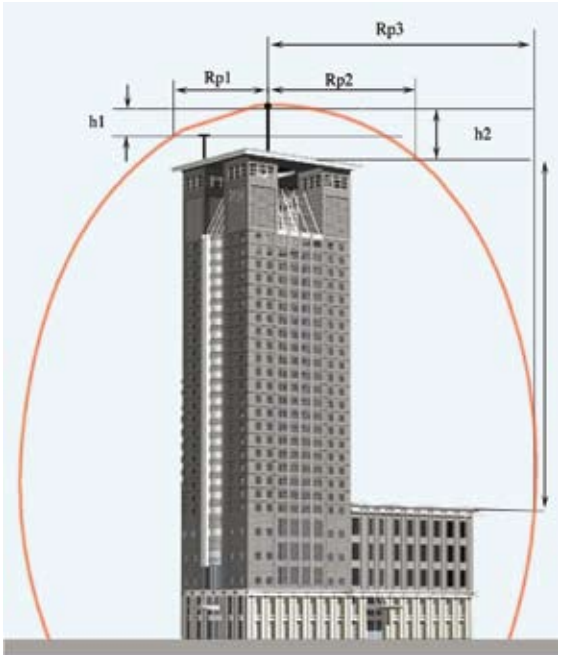

Rp (h) (m) corresponds to the protection radius for a stated height (h);

h (m) =corresponds to the height of the tip of the E.S.E. air-terminal in relation to the horizontal point passing through the top of the element to be protected.

r (m)
- 20m for protection level I
- 30m for protection level II
- 45m for protection level III
- 60m for protection level IV

$\Delta(m) = \Delta T \times 10^6$

The experience shows that Δ efficiency is obtained during the evaluation tests of the E.S.E. air-terminal.

> Protection Radius >

■ Radius of Protection of the IONIFLASH MACH NG

	Tip height in meters	2	3	4	5	6	10	15	20	30	45	60
LEVEL 1	MODELS											
	IONIFLASH MACH NG 15	13	19	25	32	32	34	35	35	34	24	
	IONIFLASH MACH NG 25	17	25	34	42	43	44	45	45	44	37	21
	IONIFLASH MACH NG 30	19	29	38	48	48	49	50	50	49	43	30
	IONIFLASH MACH NG 45	25	38	51	63	63	64	65	65	64	60	51
	IONIFLASH MACH NG 60	31	47	63	79	79	79	80	80	79	76	69
LEVEL 2	MODELS											
	IONIFLASH MACH NG 15	15	22	30	37	38	40	42	44	45	42	34
	IONIFLASH MACH NG 25	20	29	39	49	49	51	53	54	55	53	46
	IONIFLASH MACH NG 30	22	33	44	55	55	57	58	59	60	58	52
	IONIFLASH MACH NG 45	28	42	57	71	71	72	73	74	75	73	69
	IONIFLASH MACH NG 60	35	52	69	86	87	88	89	89	90	89	85
LEVEL 3	MODELS											
	IONIFLASH MACH NG 15	18	27	36	45	46	49	52	55	58	60	58
	IONIFLASH MACH NG 25	23	34	46	57	58	61	63	65	68	70	68
	IONIFLASH MACH NG 30	25	38	51	63	64	66	69	71	73	75	73
	IONIFLASH MACH NG 45	32	48	64	81	81	83	85	86	89	90	89
	IONIFLASH MACH NG 60	39	58	78	97	97	99	101	102	104	105	104
LEVEL 4	MODELS											
	IONIFLASH MACH NG 15	20	31	41	51	52	56	60	63	69	73	75
	IONIFLASH MACH NG 25	26	39	52	65	66	69	72	75	80	84	85
	IONIFLASH MACH NG 30	28	43	57	71	72	75	78	81	85	89	90
	IONIFLASH MACH NG 45	36	54	72	89	90	92	95	97	101	104	105
	IONIFLASH MACH NG 60	43	64	85	107	107	109	111	113	116	119	120

Early Streamer Emission Air Terminals / IONIFLASH MACH® Technology

> Protection Radius

■ Radius protection of a simple rod

The protected volume of a simple lightning rod depends of the height (h) of the masts where it is installed in relation to the surface to be protected, and of the Level of protection (Np).

For most of the case, the angle of protection method is suited. The angle of protection is constant for heights h lower than 2 m

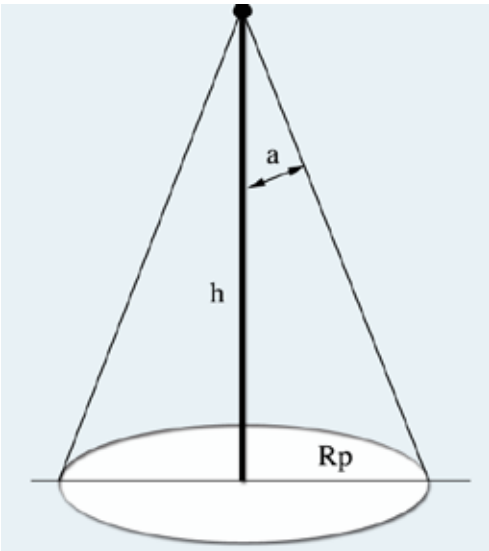

Angle of protection according to the EN 62305 standard

In comparison with the IONIFLASH MACH ESE, the table below indicates the protection radius (Rp), versus the height of the simple air-terminal and gives the protected volume.

Simple Rod protection radius (m)				
	Level I	Level II	Level III	Level IV
2	5	6	8	10
3	7	7	10	13
4	8	9	13	15
5	8	10	13	16
6	9	11	14	17
8	10	12	16	19
10	10	14	18	21
20	8	15	22	27
30		12	23	30
45			19	31
60				25

Our Products for the direct lightning Protection

Our products / Protection against direct effects of lightning

> The ESE IONIFLASH MACH®

The IONIFLASH MACH® Air Terminals

- Stainless steel 316 L range

Early Streamer Emission Air Terminal for the protection of all the structures and opened areas.

[Patented technology. High reliability

[Very early streamer emission of the leader

[Low dispersion of the time of breakdown when tested under high voltage.

[Very good Carboon footprint

In accordance with the standards NFC 17-102 and UNE 21-186

Capture elements in accordance with the standards IEC 62 561, as required in the serial standards EN/CEI 62305.

• IONIFLASH MACH NG 60

Ref. 90160

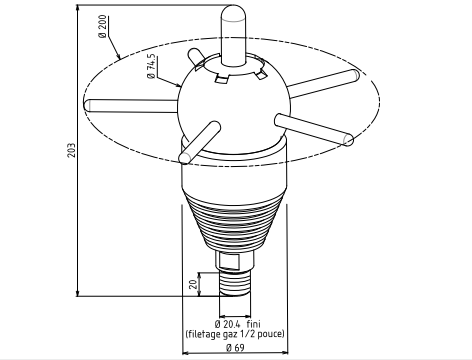

• IONIFLASH MACH NG 45

Ref. 90145

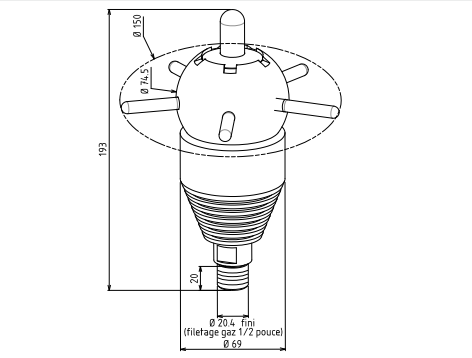

• IONIFLASH MACH NG 30

Ref. 90130

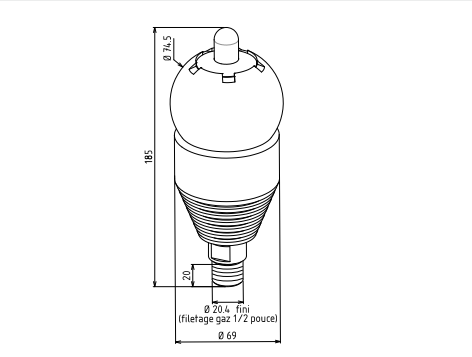

> The ESE IONIFLASH MACH®

■ The IONIFLASH MACH® Air Terminals

• IONIFLASH MACH NG 25

Ref. 90325

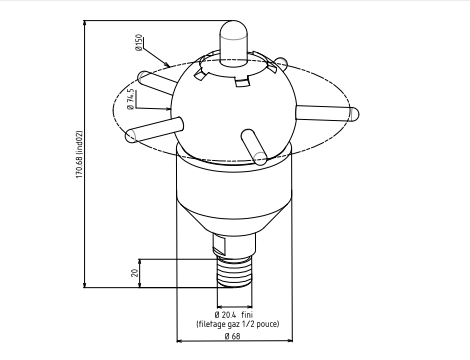

• IONIFLASH MACH NG 15

Ref. 90315

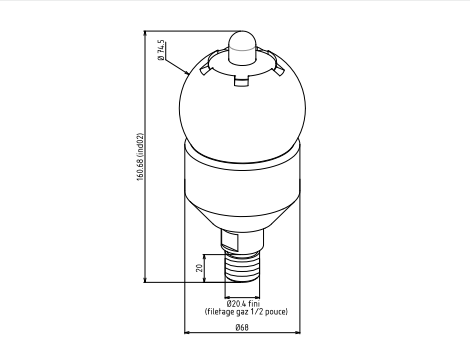

Ref	Description	Material	Emission Time		Weight
			measured	weighted	
90160	MACH NG 60	Stainless steel 316 L	135 µs	60	2,2 kg
90145	MACH NG 45	Stainless steel 316 L	114 µs	45	2,1 kg
90130	MACH NG 30	Stainless steel 316 L	87 µs	30	2 kg
90325	MACH NG 25	Stainless steel 316 L	78 µs	25	1,9 kg
90315	MACH NG 15	Stainless steel 316 L	55 µs	15	1,8 kg

> The ESE IONIFLASH MACH®

The IONIFLASH MACH® Air Terminals

- Stainless steel 316 L range with test by cable

Early Streamer Emission Air Terminal for the protection of all the structures and opened areas.

[Patented technology. High reliability

[Very early streamer emission of the leader

[Low dispersion of the time of breakdown when tested under high voltage.

[Very good Carboon footprint

• IONIFLASH MACH NG 60 TF

Ref. 90190

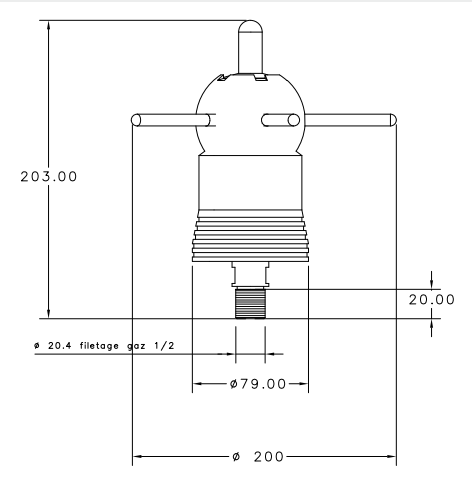

• IONIFLASH MACH NG 30 TF

Ref. 90180

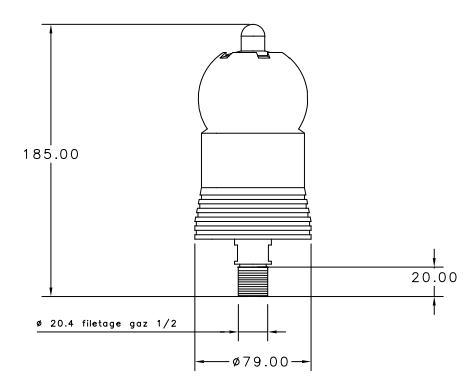

Ref	Description	Material	Emission Time measured	Emission Time weighted	Weight
90190	MACH NG 60 TF	Inox 316 L	97 µs	60	2,1 kg
90180	MACH NG 30 TF	Inox 316 L	88 µs	30	2,2 kg

> The ESE IONIFLASH MACH®

Sets of IONIFLASH MACH NG TF

- **10290 :** 1 IONIFLASH MACH NG60 TF (90190) + 1 Pole of 2 m In 304 L Stainless Steel (11043) + 1 collar of fixation in tinplated copper (15302 b)

- **10280 :** 1 IONIFLASH MACH NG 30 TF (90180) + 1 Pole of 2 m In 304 L Stainless Steel (11043) + 1 collar of fixation in tinplated copper (15302 b)

- Control Devices for IONIFLASH MACH NG

- **13501 :** Control cable of 7 m with 2 female connectors for **IONIFLASH MACH NG** 30 TF and 60 TF

- **31001 :** Control Box MACHTEST for **IONIFLASH MACH NG TF**

Ref. 31001

Our products / Protection against direct effects of lightning

> The ESE IONIFLASH MACH®

Sets of 2,15 m IONIFLASH MACH

- The IONIFLASH MACH NG kits are constituted of the elements below :

- **10260 :** 1 IONIFLASH MACH NG60 (90160) + Pole of 2m in 304 L stainless steel (11042) + 1 collar of fixation in tinplated copper (15302)
- **10245 :** 1 IONIFLASH MACH NG45 (90145) + Pole of 2m in 304 L stainless steel (11042) + 1 collar of fixation in tinplated copper (15302)
- **10230 :** 1 IONIFLASH MACH NG30 (90130) + Pole of 2m in 304 L stainless steel (11042) + 1 collar of fixation in tinplated copper (15302)
- **10225 :** 1 IONIFLASH MACH NG25 (90325) + Pole of 2m in 304 L stainless steel (11042) + 1 collar of fixation in tinplated copper (15302)
- **10215 :** 1 IONIFLASH MACH NG15 (90315) + Pole of 2m in 304 L stainless steel (11042) + 1 collar of fixation in tinplated copper (15302)

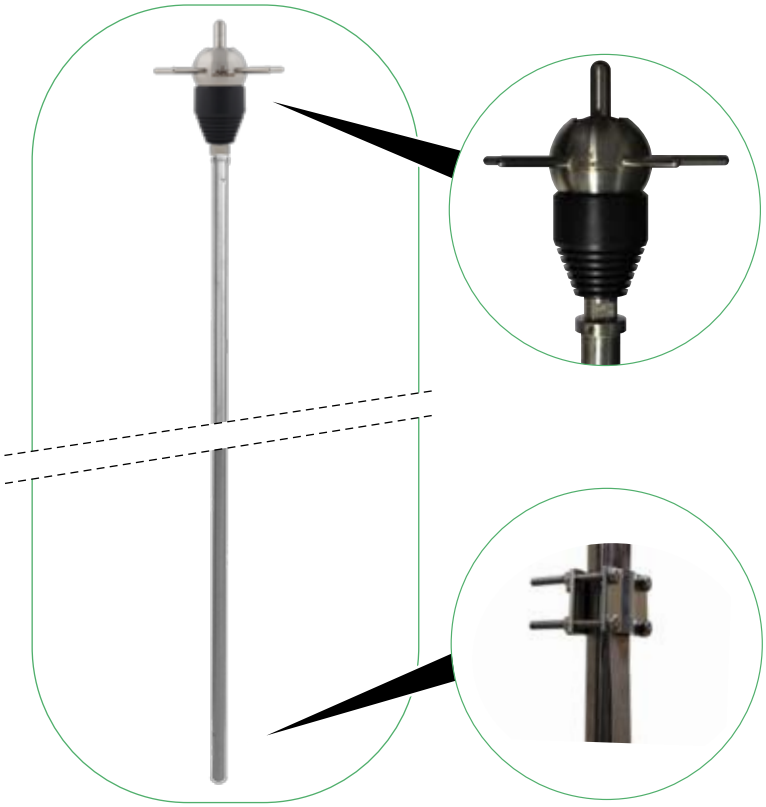

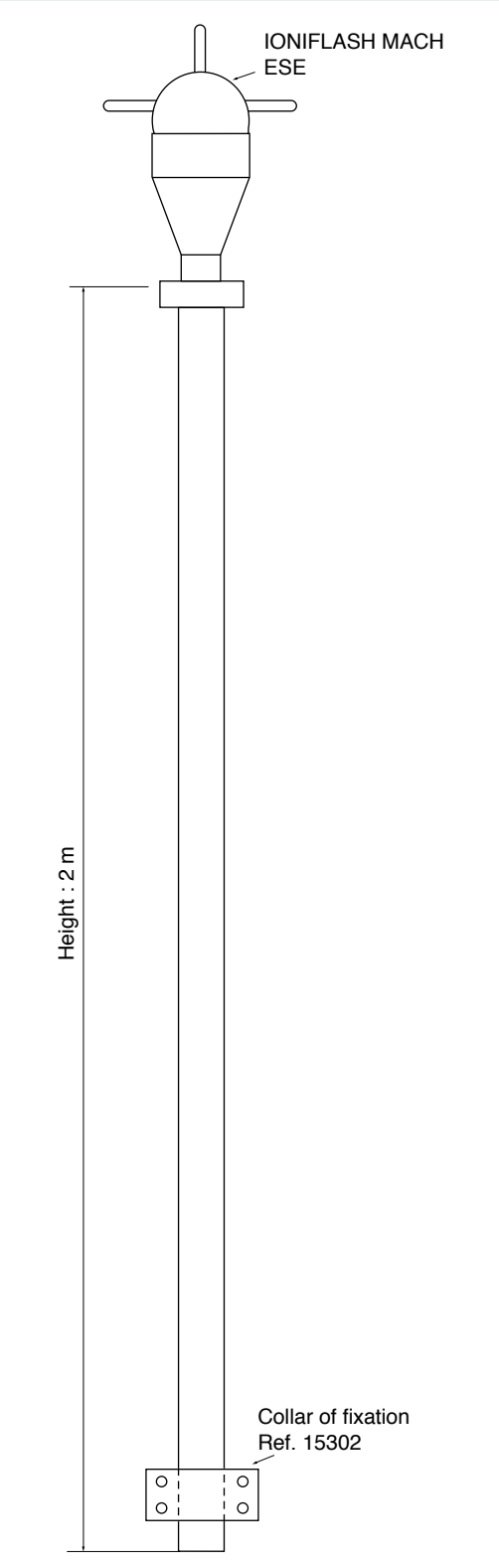

Ref	Length	Weight
10260	2,15 m	6,31 kg
10245	2,15 m	6,30 kg
10230	2,15 m	6,29 kg
10225	2,15 m	6,28 kg
10215	2,15 m	6,27 kg

> The ESE IONIFLASH MACH®

The IONIFLASH MACH® range

- Copper range

E.S.E. Air terminals for the protection of all types of structures and all open spaces.

[Patented technology. Very reliable

[Very early streamer emission of the leader. Emission at the right time

[Low dispersion of the time of breakdown when tested under high voltage.

[Very good carbon footprint.

- **IONIFLASH MACH NG 15**

Ref. 90316

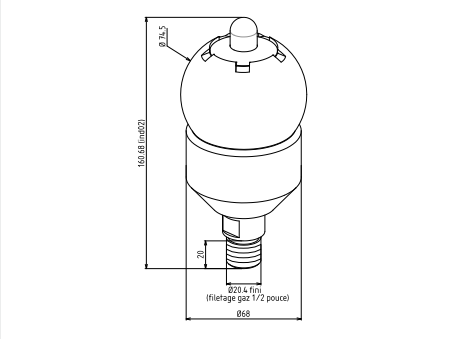

- **IONIFLASH MACH NG 30**

Ref. 90131

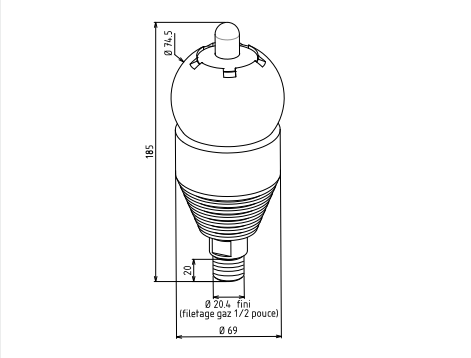

Ref	Designation	Material	Advanced Time		Weight
			Measured	Weighted	
90316	MACH NG 15	S/s copper bonded 316 L	55 µs	15	1,8 kg
90131	MACH NG 30	S/s copper bonded 316 L	87 µs	30	2 kg

> Testing Devices and Lightning Impulse Counters >

Test on IONIFLASH MACH®

The **IONICHECK®** enables to confront the **IONIFLASH MACH® NG** to a typical high voltage lightning impulse.

- **30055**

The high voltage test bench **IONICHECK®** is composed of a high voltage generator (200 000 Volts).

By its design, its use allows to carry out reliable tests of functioning in total security.

The **IONICHECK®** is an autonomous, transportable and rechargeable device.

Security : the release of the high voltage is carried out by activating simultaneously two push buttons positioned on both sides of the lower box.

*This high voltage test bench allows to control and to guarantee the well functioning of the **IONIFLASH MACH® NG** with the following checkings:

[**Insulation Test (Ω)** : Check the well insulation of the different parts of the ESE air terminal.

[**High Voltage test (HV)**: Check the well functioning of the early streamer emission internal device of the air terminal under high voltage (200 000 Volts).

Ref. 30055

Ref	Material	Voltage	Test	Power Supplies
30055	Hard Plastic Suitcase	200000 V	HV Test	9V Battery

> Testing Devices and Lightning Impulse Counters >

Test of the IONIFLASH MACH® - IONITEST

Verification of the well-functioning of the **IONIFLASH MACH®** range.

• **31003** Ref. 31003

Test on the air-terminal uninstalled.

The well-functioning of each air-terminal **IONIFLASH MACH®** can be easily checked by two contact points..

The test must be realised following each step of the instructions manual.

Ref	Function	Power Supply	Dimension	Composition	Weight
31 003	Testing device IONITEST	3 batteries 1,5 V AAA	68 x 120 x 28	1 testing device 2 cables of 1 m	180 g

Our products / Protection against direct effects of lightning

> Testing Devices and Lightning Impulse Counters >

Connected Counter I FLASH REPORT

This counter allows the recording of the lightning strikes. These data are remotely accessible on a smartphone via a Bluetooth® com-system through the "FPT" application, or directly on the display.

• Battery life is between 2 and 3 years, in a normal contexte of use : consultation of the device once per trimester.
For a more frequent use, the lifetime of the battery can be lower.
In this case,it is necesary to change the battery.

• The counter is fastened on the conductors thanks to two screws accessible on the front face of the product. It fa-setting of the product on the lightning protection instal-fastening it directly on the down conductors situated outdoor (Class as well as on the earthing system conductors situated on the inside lines (Class II).

• It is the first lightning strike counter recorder for use on ELPS (External Lightning Protection System) and ILPS (Internal Lightning Protection System)

• This innovation is Protected by an international patent

Assembly Principle

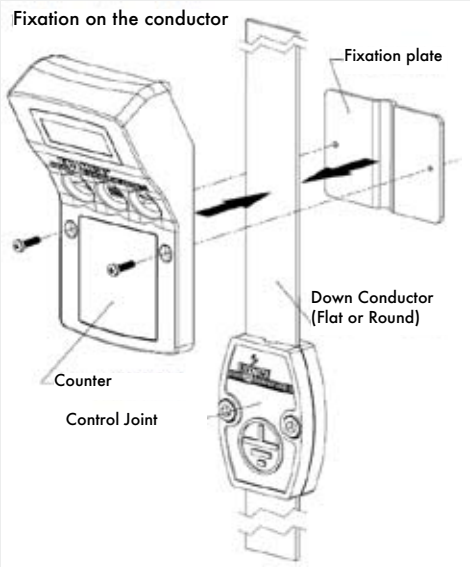

• 30004

Reference	30 004
Connectivity	Bluetooth®
Reference Standard	NF EN 62561-6
Counting	Up to 100 impacts
Functioning	Electronic
Detection range	1 kA (8/20µs) / 100 kA (10/350µs)
Size	133 x 71 x 50 mm
Weight	200 g
Protection Index	IP67
Temperature scale	- 25°C to + 70°C
Power supply	Lithium battery 3.6 V
Fixing	Parallel to any type of conductor

Ref. 30004

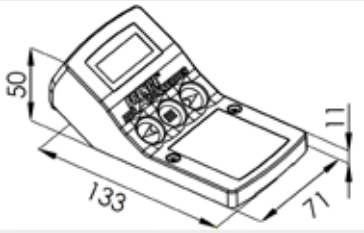

> Lightning Impulse Counters >

The Lightning impulse counter

This counter records each lightning stroke on a lightning protection system. This information can be useful to do the maintenance of the lightning protection system after a lightning impact.

[Thanks to its reliable construction, this counter resists very well the outdoor difficult conditions (rain, sun). It is totally autonomous and requires no supply.

[Its performance was tested in COFRAC laboratory, and is guaranteed until 100kA, on negative and positive lightning strokes.

[Its small size allows it to be integrated discreetly on the lightning conductor.

Assembling principle

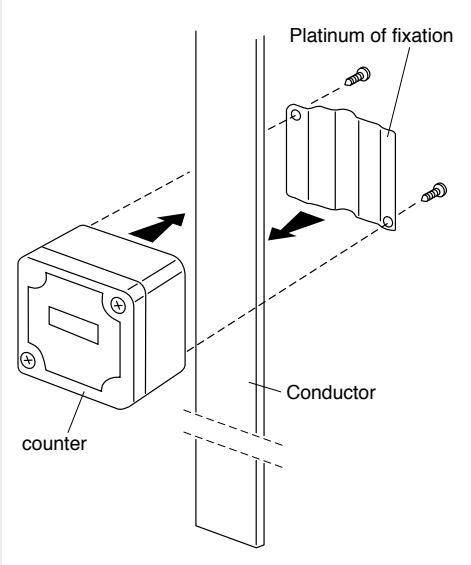

• 30002

Ref	30002
Fastening	Parallel
Counter	1-999999
Function mode	Electromechanic
Range of detection	1 kA - 100 kA (8/20 µs)
Size	52 x 50x 30 mm
Weight	200 g
Protection index	IP66

Ref. 30002

Operation

Placed directly on the lightning conductor, this meter uses fields shone by the current of lightning to activate an electromechanic meter.

Connection

This counter is installed just in contact of the lightning conductor (round Ø 8 to 10mm, flat 30x2 or 30x3mm) above the inspection joint, and at 2 meters behind the ground (NF C 17-102).

Fastening

The fastening is made on the counter with the stamped stainless steel plate Thanks to its light weight, the product can simply be supported be the lightning conductor.

> Lightning Impulse Counters >

The Lightning impulse counter / IEC 62 561-6

Counts the number of lightning impacts on an external installation for lightning protection. Easy to read and use.

[Battery supply functionning

- **30001**

Ref. 30001

Ref	30001
Fastening system	Parrallel
Counter	0-999999
Function mode	Electronic
Detection range	1 kA - 100 kA
Dimensions	65 x 50 x 45 mm
Weight	140 g

> Capture systems >

Capture points

Those elements are often use to complete a lightning portection by ESE in order to protect structure with many salient angle (cathedral, castle, …).

[To use with their adapted fastening systems (Ref. 17012 or 17013). Their M10 threading enables a safety and simple installation.

- **17001/17002**

Ref. 17001

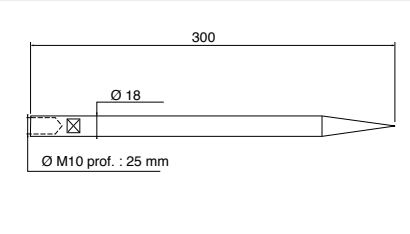

Ref	Material	Diameter	Length	Weight
17001	S/s 304 L	17 mm	30 cm	0,5 kg
17002	S/s 304 L	17 mm	50 cm	0,91 kg

The simple and multiple rod

Air Terminals with simple rods to protect roof structures, chimneys, …

[This tips adapt (themselves) perfectly on the poles.
(Ref : 11042 à 11045

- **10013/10014/10017**

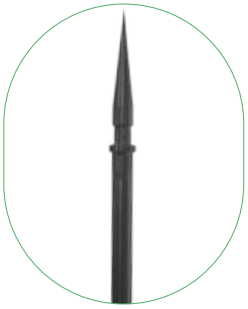

Ref. 10013/10014

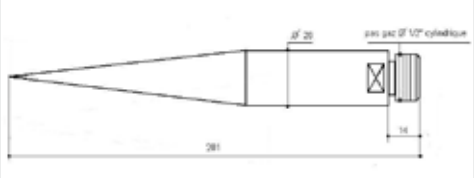

Ref. 10017

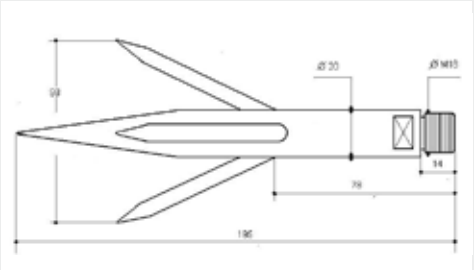

Ref	Material	Diameter	Length	Weight
10013	S/s 304 L	30 mm	2,15 m	5 kg
10014	S/s copper bonded 304 L	30 mm	2,15 m	5 kg
10017	S/s 304 L	30 mm	2,15 m	5 kg

Our products / Protection against direct effects of lightning

> Brackets and fixings >

The Stainless Steel Pole

To attach the Air Terminal on a lightning protection installation 2 m above the highest point. The top has a threaded part at the top to fix the air terminal **IONIFLASH MACH®**.

[Very good electrical and mechanical contact.

[In order to receive the 1st extended mast collar, the pole is drilled.

[The pole is able to receive a copper sheath (Ref 18020)

• **11042/11043/11044**

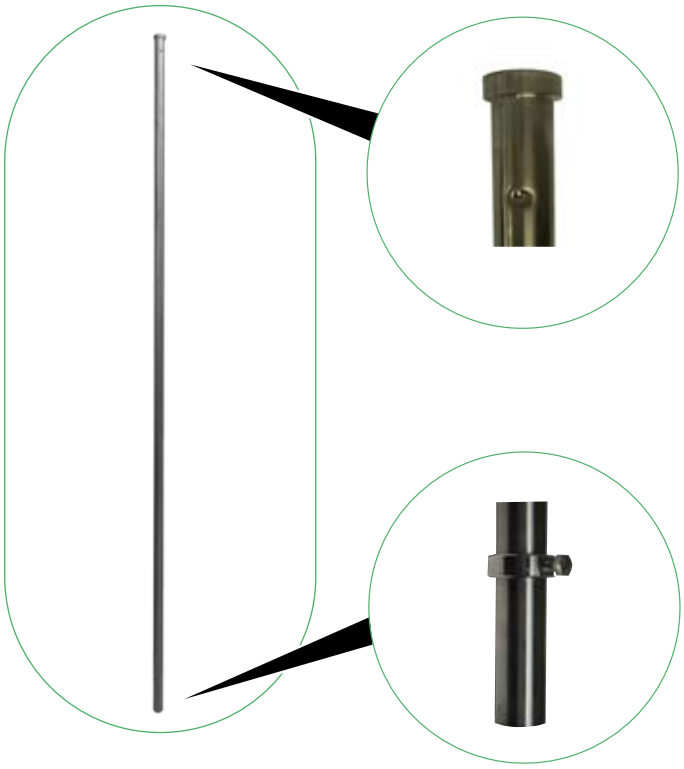

Ref. 11042/11043/ 11044

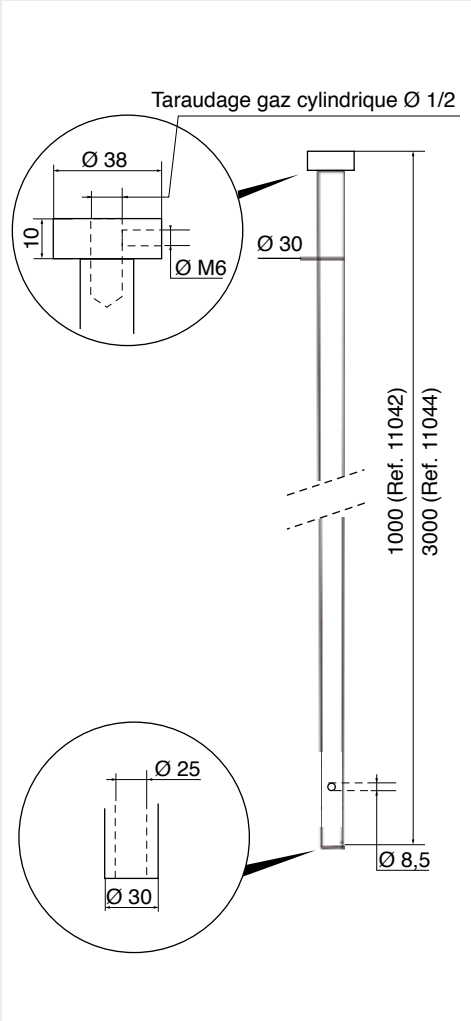

Ref	Material	Length	Diameter Inside / outside	Weight
11042	S/s 304 L	1 m	25/30 mm	2 kg
11043	S/s 304 L	2 m	25/30 mm	4 kg
11044	S/s 304 L	3 m	25/30 mm	6 kg

> Brackets and fixings >

The Stainless Steel Pole

- The deported pole

[Ideal bracket for the fixation of the **IONIFLASH MACH®** air-terminal on factories' chimney.

• **11047**

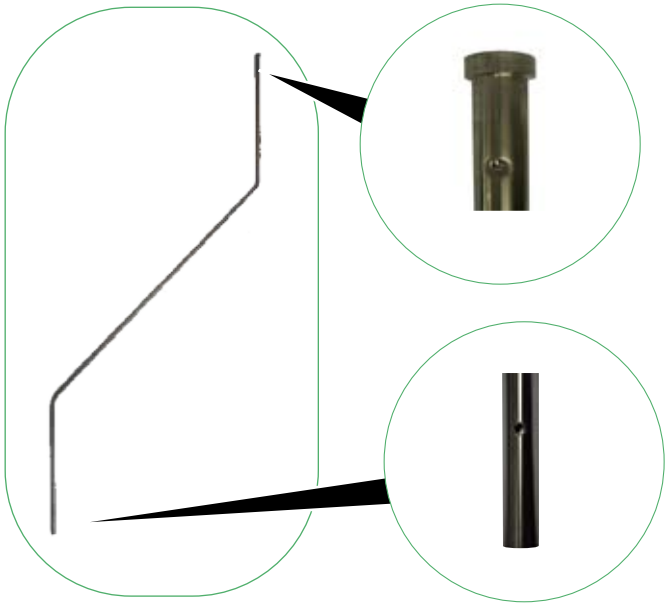

Ref. 11047

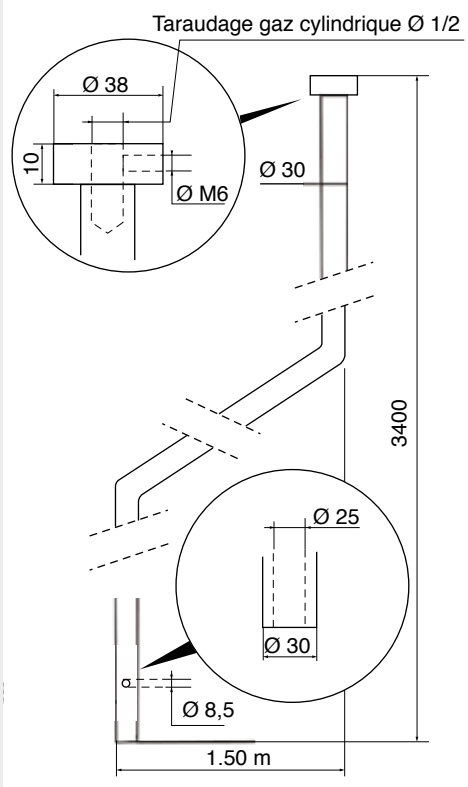

Ref	Material	Length	Diameter inside	Weight
11047	S/s 304 L	4 m	25 mm	10 kg

The Extension

Transition piece between Air Terminal and the pole (Ref11042 to 11048).
[Ideal for fastening of the connection collar for conductors (Ref. 15301) Equipped of a threaded system and of a security screw.

• **90110**

Ref. 90110

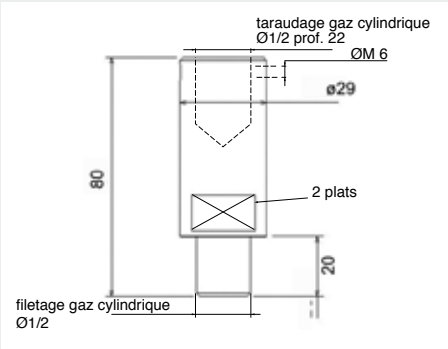

Ref	Material	Length	Diameter Inside / outside	Weight
90110	S/s 304 L	80 mm	24,8/38 mm	0,35 kg

Our products / Protection against direct effects of lightning

> Brackets and fixings >

The extended masts

These 304L stainless steel extended masts are used to raise the height of the Air Terminal on the highest point of the building.

[They can be lengthened depending on the height required

[Delivered with fixation collar in stainless steel at the bottom part.

[The masts are simply inserted and the stainless steel bolt screwed on the nut.

- **11037/11039/11041**

Ref	Designation	Material	Length	Diamètre extérieur	Weight
11037	1er mast	S/s 304 L	2 m	33,7 mm	3 kg
11039	2eme mast	S/s 304 L	2 m	42,4 mm	6 kg
11041	3eme mast	S/s 304 L	2 m	48,3 mm	7 kg

Their installations by superimposition on a 200 mm retreint with tightening by 304L stainless steel ring allows to reach the heights of:

Global set : 11037 = 2,03 m
Global set : 11037 + 11039 = 3,65 m
Global set : 11037 + 11039 + 11041 = 5,35 m
For greater height : Please consult us.

*Maximum height admitted : 8 m (guy wire needed).
For any height up than 8m : Installer's responsability.

Ref. 11037/11039/11041

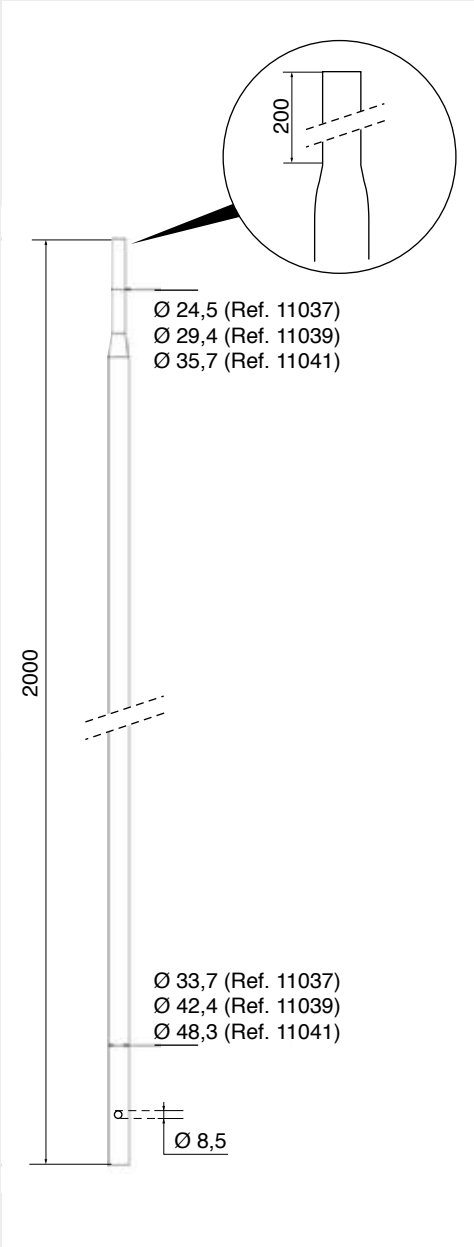

> Brackets and fixings >

Principle of fitting of the mast

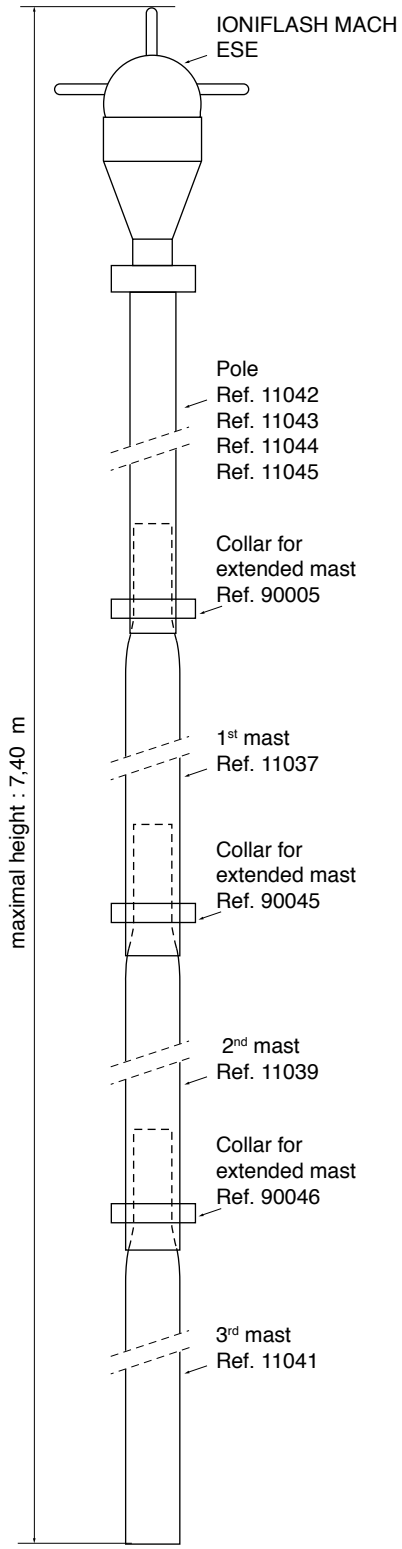

> Brackets and fixings >

Guy wires kit

The guy wire kit enables to stabilize air-terminal when they are installed at such a high that the wind force can impact the efficiency of the system.

[This kit is composed of

- 1 guying plate in brass (diameter 35mm)
- 30 m of flexible cable in stainless steel 316L Ø 4mm
- 18 cable clamp in stainless steel (diameter 4mm)
- 3 rope tensioners (2 M8 hole – in stainless steel)
- 6 thimbles

This kit is adapted for the implementation of 3 guy wires of 10 meters.

• **18202**

> Brackets and fixings >

Capture point brackets (for Ref 17001/ 17002)

Brackets for capture point equipped with a waterproof ring. Points fixed in masonry or on a metal roof structure.

[The 17012 Reference is equipped with a lead ankle, and is so adapted to mansonry.

[The 17013 reference is the ideal solution for fixing the capture point on metallic structure

- **17012**

Ref. 17012

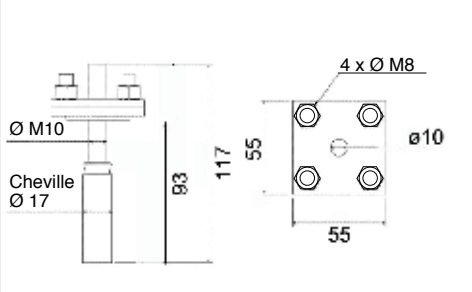

- **17013**

Ref. 17013

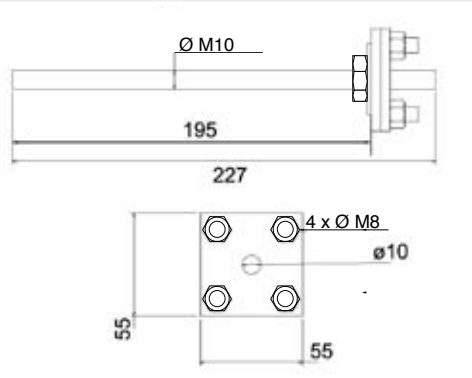

Ref	Material	Diameter	Weight	Delivered with
17012	Stainless Steel Tin-Plated Copper Plates	93 mm	0,41 kg	Lead ankle
17013	Stainless Steel Tin-Plated Copper Plates	195 mm	0,43 kg	Thread stalk + nut

Our products / Protection against direct effects of lightning

> Brackets and fixings >

Embedding clamp

For fixing air terminals on masonry

- **12001/12002**

Ref. 12001/12002

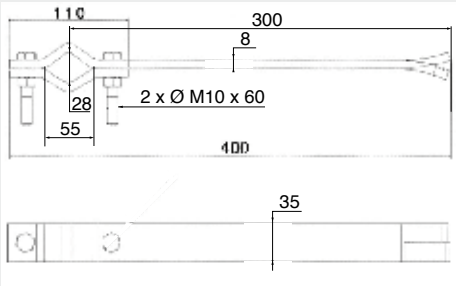

Ref	Material	Profil shift	Height of support	Packaging	Weight
12001	Galvanized Steel	400 mm	< 4 m	2	2,44 kg
12002	Galvanized Steel	400 mm	< 8 m	3	3,66 kg

Universal clamp

Universal clamp for fixing air terminal brackets on all types of elements.

[System adapts to all situations.

- **12006/12007**

Ref. 12006/12007

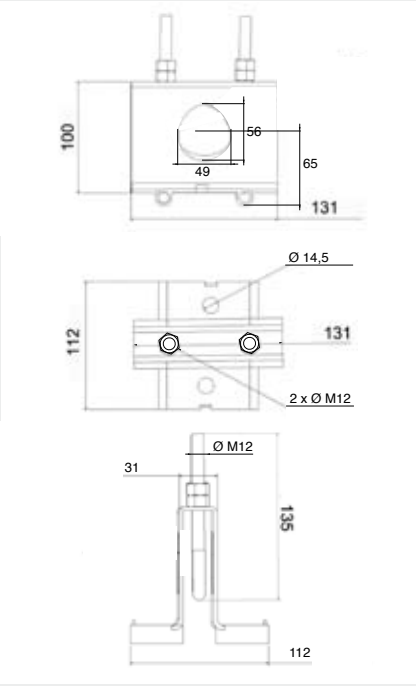

Ref	Matière	Profil shift	Height of support	Packaging	Weight
12006	Galvanized Steel	40 mm	< 4 m	2	2,14 kg
12007	Galvanized Steel	40 mm	< 8 m	3	3,21 kg

> Brackets and fixings >

Bolting brackets

For fixing air terminals on masonry.

- **12012/12013/12022/12023**

Ref	Material	Profil shift	Height of support	Packaging	Weight
12012	Galvanized Steel	200 mm	< 4 m	2	2,58 kg
12013	Galvanized Steel	200 mm	< 8 m	3	3,88 kg
12022	Galvanized Steel	300 mm	< 4 m	2	5 kg
12023	Galvanized Steel	300 mm	< 8 m	3	7,5 kg

Ref. 12012/12013/12022/12023

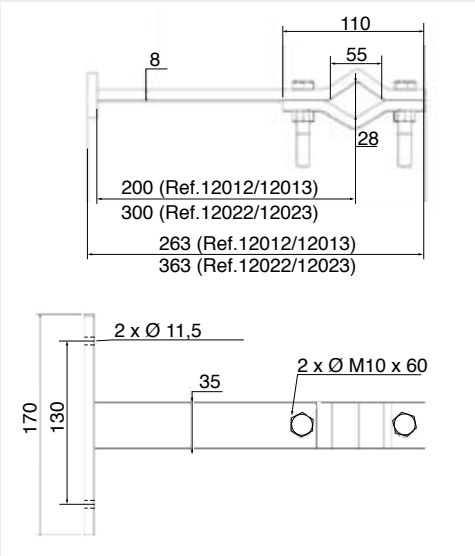

Extended fixing brackets

For fixing air terminals on round elements or on a surface which cannot be drilled.

- **12014/12015/12020/12021**

Ref	Material	Profil shift	Height of support	Packaging	Weight
12014	Galvanized Steel	150 mm	< 4 m	2	2,50 kg
12015	Galvanized Steel	150 mm	< 8 m	3	3,75 kg
12020	Galvanized Steel	240 mm	< 4 m	2	3 kg
12021	Galvanized Steel	240 mm	< 8 m	3	4,5 kg

Ref. 12014/12015/12020/12021

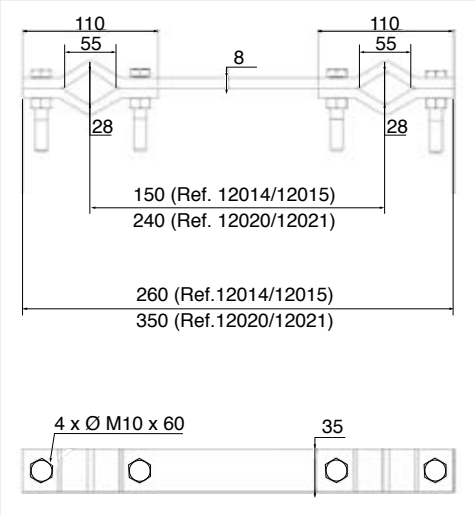

> Brackets and fixings >

Lateral clamp

These lateral clamps are used to fix air terminals to round elements.

- **12016/12028**

Ref. 12016/12028

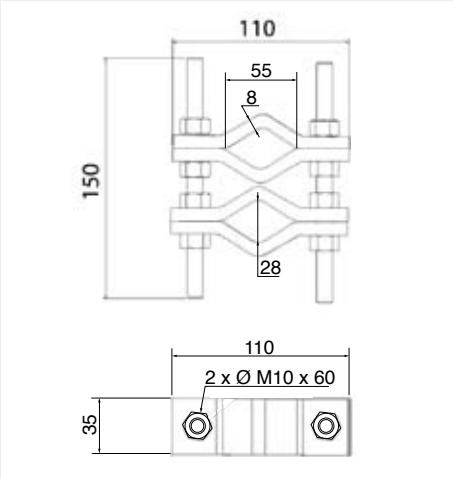

Ref	Material	Profil shift	Height of support	Packaging	Weight
12016	Galvanized Steel	150 mm	< 4 m	2	2,50 kg
12028	Galvanized Steel	150 mm	< 8 m	3	3,75 kg

Lateral clamp

These lateral clamps are used to fix air terminals to flat elements.

- **12026/12027**

Ref. 12026/12027

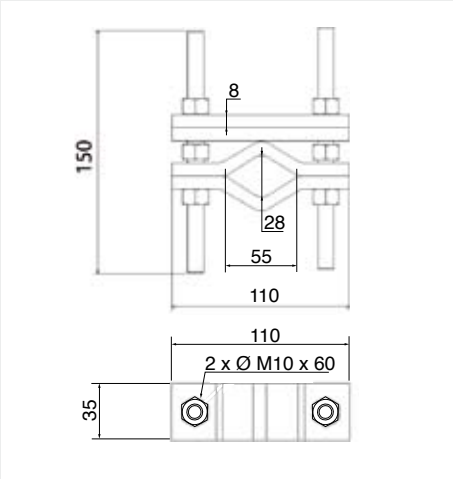

Ref	Material	Profil shift	Height of support	Packaging	Weight
12026	Galvanized Steel	150 mm	< 4 m	2	2,44 kg
12027	Galvanized Steel	150 mm	< 8 m	3	3,65 kg

> Brackets and fixings >

Hooping of chimney

This is a kit of 2 chimney hooping system for a height < 4m in galvanized steel

- **12003/12004**

Ref. 12003/ 12004

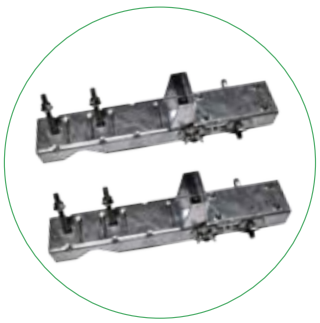

Ref	Material	Profile shift	Height of the support	Packaging	Weight
12003	Galvanized steel	320 mm	< 4 m	2	1,8 kg
12004	Galvanized steel	320 mm	< 8 m	3	2,7 kg

> Brackets and fixings >

Tripod

Fixing Air terminals on flat roofs. Bolted tripod or stand alone version.

[Available in bolted or freestanding version.(on request)

- **12017**

available on request

Ref	Designation	Material	Footing	Air-terminal maximum height	Weight
12017	Bolted Tripod	Galvanized	0,75 m	8	9 kg

Screwing clamp

Fixing brackets for air terminals directly into masonry.

- **12018/12019**

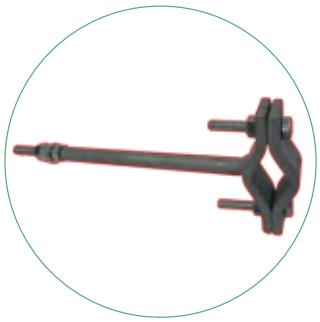

Ref. 12018/12019

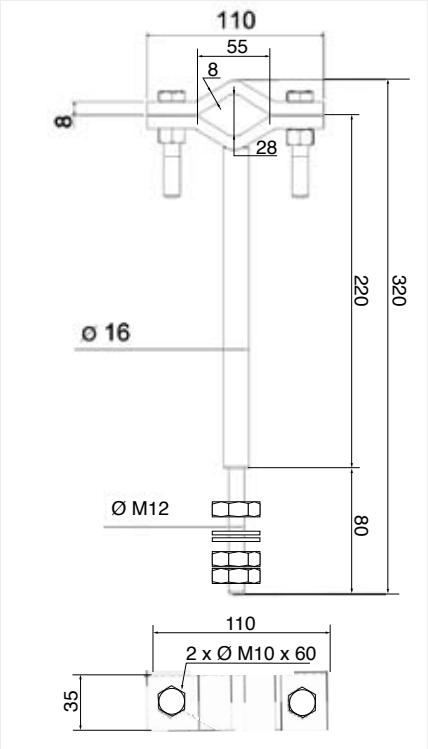

Ref	Material	Profil shift	Height of support	Packaging	Weight
12018	Galvanized Steel	200 mm	< 4 m	2	1,96 kg
12019	Galvanized Steel	200 mm	< 8 m	3	2,94 kg

> Brackets and fixings >

Waterproofing

Waterproofing when the Air terminal pole is fixed through a roof.

[The tile must be installed with the cone, delivered with a cone. (réf. 12114)

[Cone can be delivered independently (Ref 80087)

• **12114/80087**

Ref. 12114/80087

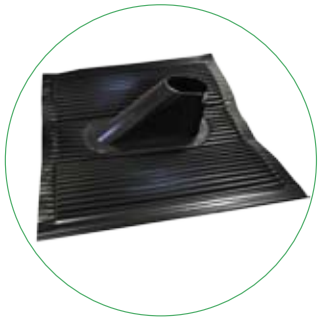

Ref	Designation	Material	Dimensions	Weight
12114	Waterproof tile	Polyethylene	550 x 500 x 190 mm	0,56 kg
80087	Waterproof cone	Polyethylene	120 x 120 x 70 mm	0,03 kg

Anchor bolt

These anchor bolts are used to fix Air Terminals directly on wood frames.

• **90079/90080**

Ref. 90079/90080

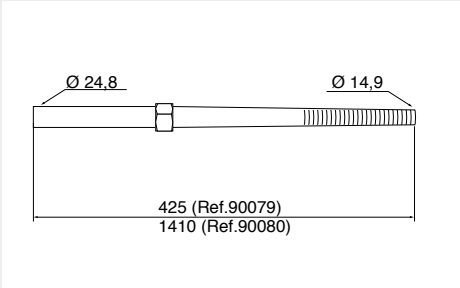

Ref	Material	Length	Upper diameter	Weight
90079	Bichromated steel	0,425 m	24,8 mm	1,5 kg
90080	Bichromated steel	1,41 m	24,8 mm	5,5 kg

> Lightning Conductors >

Flat copper

Copper strips for use as down-conductors for earthing systems of Air Terminals

- **13001/13011**

Ref. 13001/13011

Ref	Material	Width	Thickness	Packaging	Weight
13001	Tinplated copper	30 mm	2 mm	50 m roll	0,534 kg /m
13011	Copper	30 mm	2 mm	88m roll	0,534 kg /m

Aluminum

Aluminum strips for use as down-conductors for earthing of Air Terminals.

- **13002**

Ref. 13002

Ref	Material	Width	Thickness	Packaging	Weight
13002	Aluminum	30 mm	3 mm	50 m roll	0,244 kg /m

> Lightning Conductors >

Round copper

Round copper section which can be used as a down-conductor or for earthing Air Terminals.

- **13003**

Ref. 13003

Ref	Material	Diameter	Packaging	Weight
13003	Tinplated copper	8 mm	55 m roll	0,45 kg /m

Flat Steel

Steel strips for use as down-conductors for earthing of Air terminals.

- **13004/13010**

Ref. 13004/13010

Ref	Material	Width	Thickness	Packaging	Weight
13004	S/s 304 L	30 mm	2 mm	50 m roll	0,50 kg /m
13010	Galvanized Steel	30 mm	3,5 mm	30 m roll	0,833 kg /m

Our products / Protection against direct effects of lightning

> Lightning Conductors >

Elbow preformed

90° Preformed Elbow for down conductor. Tinplated copper plate 30 x 2 mm.

- **13006**

Ref. 13006

Ref	Material	Width	Thickness	Weight
13006	Tinplated copper	30 mm	2 mm	0,32 kg /m

Stranded copper

Copper cable for use as an earthing conductor.

[Available in two sections : 25 ou 50 mm²

- **13007/60014**

Ref. 13007/60014

Ref	Material	Section	Diameter	Packaging	Weight
13007	Copper	50 mm²	16 mm	50 m roll	0,44 kg /m
60014	Copper	25 mm²	8 mm	50 m roll	0,23 kg /m

> Conductors fixings >

Clamps for mansonry

For fixing conductors on stone or any other type of masonry.

[These clamps are fixed with special masonry lead peg (ref.14004) (See accessories)

- **14001/14003/14005/14008**

Ref. 14001/14003/14005/14008

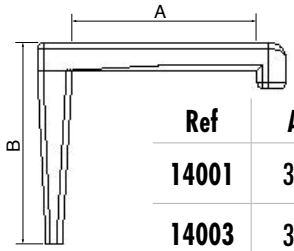

Ref	A	B
14001	31	36,5
14003	31	56
14005	31	35

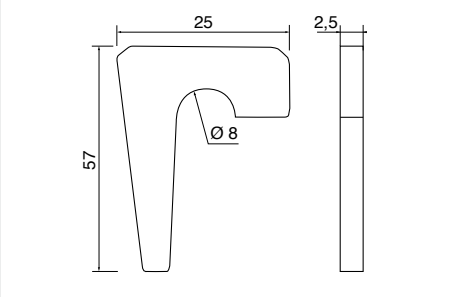

Ref	Designation	Material	Length	Weight	To use with
14001	Clamp 30	Galvanized Steel	30 mm	25 g	Plate 30 x 2 mm²
14003	Clamp 50	Galvanized Steel	50 mm	17 g	Plate 30 x 2 mm²
14005	Clamp 30i	S/s 304L	30 mm	16 g	Plate 30 x 2 mm²
14008	Clamp r8	Copper	37 mm	8 g	8 mm round

Mansonry lead peg for brickdowm clamp

For brickwork clamp. Ref. 14001 / 14003 / 14005

- **14004**

Ref. 14004

Ref	Material	Weight
14004	Lead	6,2 g

> Conductors fixings >

Clamps for mansonry

Plastic collar for fixing flat conductors on stone or any type of masonry. Conductors insulated from their support.

- **14021**

Ref. 14021

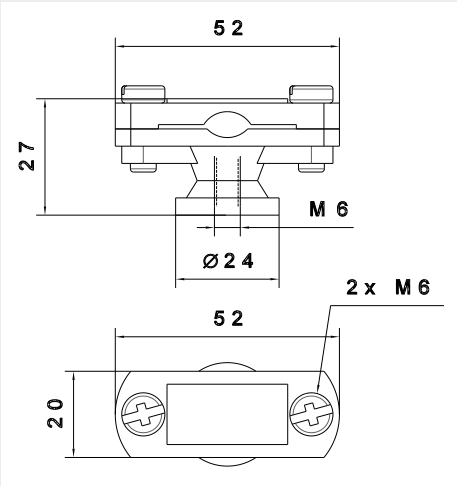

Ref	Designation	Material	Dimensions	Weight
14021	Plastic collar	Plastic	52 x 20 x 27 mm	25 g

Clamps for roof

Fixing of down-conductors on all types of roof.

[Such as : tile, slate, stone,....

- **14006/14007**

Ref. 14006/14007

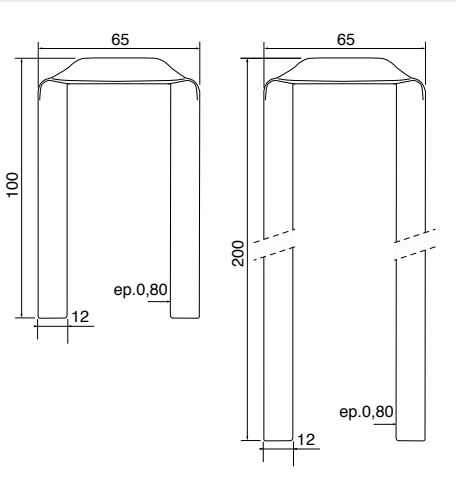

Ref	Designation	Material	Length	Weight	To use with
14006	Staple 100	Tinplated copper	100 mm	22 g	Plate conductor
14007	Staple 200	Tinplated copper	200 mm	40 g	Plate conductor

> Conductors fixings >

Clamps for roof

Fixing of down-conductors on all types of roof.

[Such as : tile, slate, stone,....

- **14034/14000**

Ref. 14034

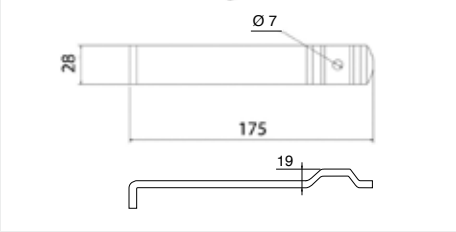

Ref. 14000

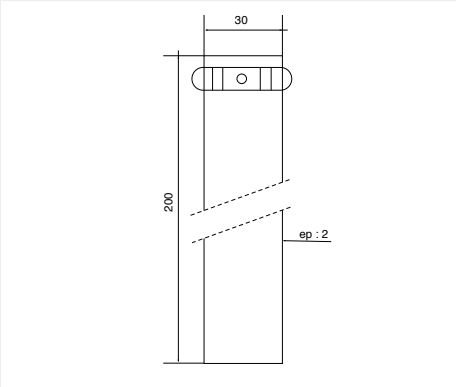

Ref	Designation	Material	Length	Weight	To use with
14034	Fastening strap	Copper	100 mm	54 g	Plate or round conductor
14000	Rein for slate	Tinplated copper	200 mm	58 g	Plate conductor

Straps ride

For fixing flat conductors. Protects the conductor against damage

- **14010/14009**

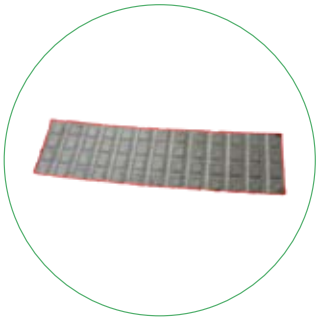

Ref. 14010

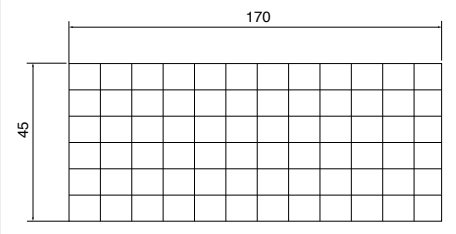

Ref. 14009

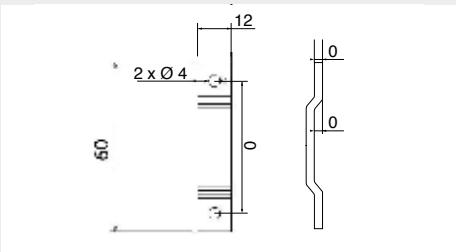

Ref	Designation	Matière	Dimensions	Poids	A utiliser avec
14010	Ruberalu	Ruberalu	170 x 45 mm	35 g	Rivets
14009	Riveted or welded strap	Tinplated Copper	60 x 12 mm	3g	14012 or 14013

Our products / Protection against direct effects of lightning

> Conductors fixings >

Blind Pop rivets

Rivets to fix the fastening component range.

- **14011/14012/14013**

Ref. 14011/14012/14013

Ref	Désignation	Material	Length	Weight
14011	Rivet Alu Waterproof	Aluminium	9,5mm	1g
14012	Rivet Cu9 Waterproof	Copper	9,5mm	2,3g
14013	Rivet Cu16	Copper	16mm	3g

Metal sheet fixations - Clips

For fixing flat conductors on sheet metal
"Quick and no-return function".

- **14015**

Ref. 14015

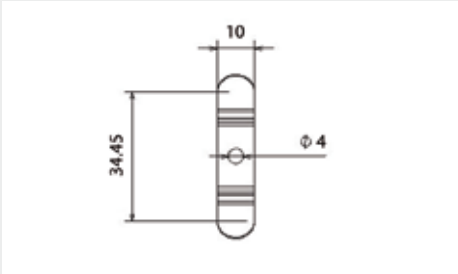

Ref	Désignation	Material	Dimensions	Weight	To use with
14015	Stainless Steel clip	S/s 304 L	35 x 10 mm	3 g	14012 or 14013

> Conductors fixings >

Fixations for round conductors

Fixing round, 8 mm diameter conductors. Delivered with stainless steel screw.

- **14031/14033**

Ref. 14031/14033

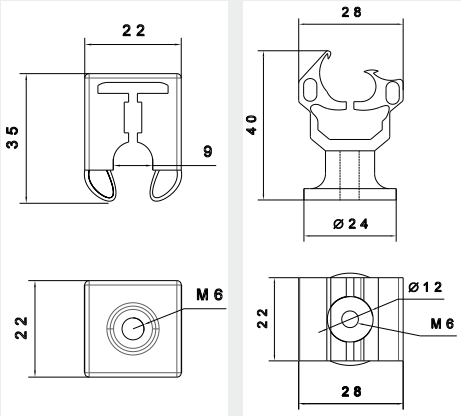

Ref	Designation	Material	Dimensions	Weight
14031	Stainless steel clip	Stainless Steel	20 x 22 x 35 mm	25 g
14033	Locking clip	Plastic	20 x 22 x 35 mm	16 g

Swivel orientable

Fasteners which can be swivelled for any type of conductor on roof frames.

- **14041**

Ref. 14041

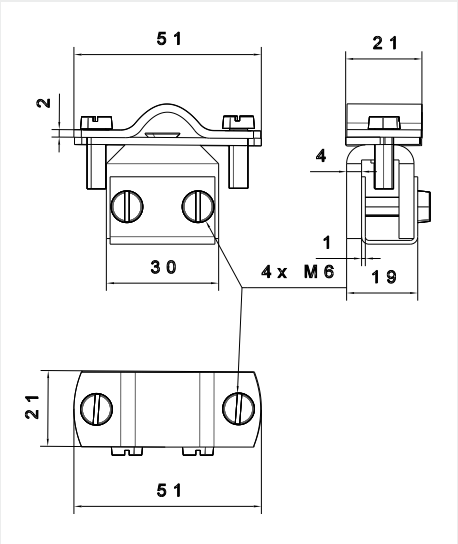

Ref	Designation	Material	Dimensions	Weight
14041	Swivel fastener	Galvanized Steel	51 x 21 x 38 mm	110 g

Our products / Protection against direct effects of lightning

> Conductors fixings >

Ridge

Adjustable fixing of round or flat conductors on ridges.

- **14042**

Ref. 14042

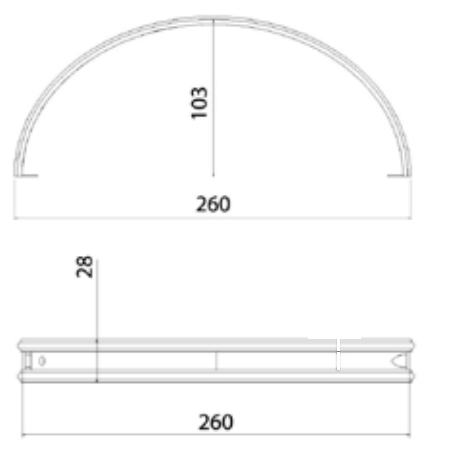

Ref	Designation	Material	To use with	Weight
14042	Ridge fastener	Stainless Steel	14021 for tape 14031 or 14033 for round	195 g

Stands off

Fixing flat or round conductors on flat waterproof roofs.

- **14044s**

Ref. 14044s

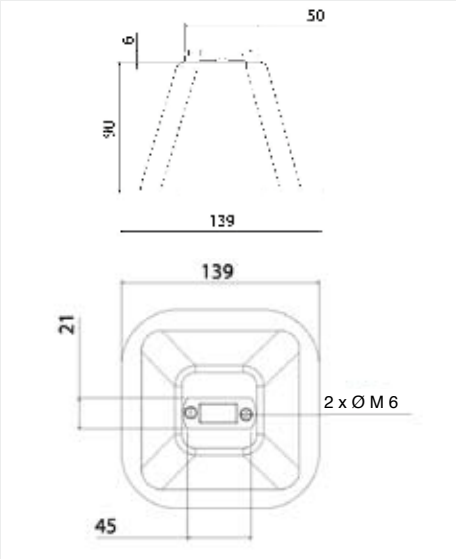

Ref	Désignation	Material	Height	Weight
14044s	Plastic stand with base	Plastic + concrete	90 mm	1kg
80044	Plastic stand (empty)	Plastic	90 mm	82g

> Conductors fixings >

Gutter

Quick fixing of flat or round down-conductors on gutters.

- **14045**

Ref	Designation	Material	Weight
14045	Gutter clamp	Galvanized Steel	195 g

Ref. 14045

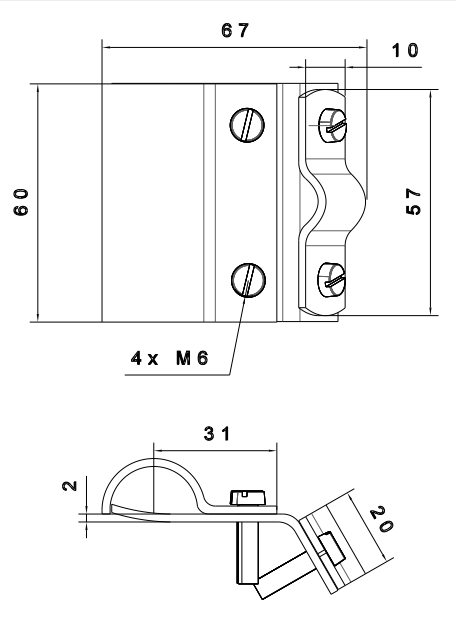

Our products / Protection against direct effects of lightning

> Conductors interconnection >

Join

Connection Flat/Flat :
to assemble two flat conductors.

Connection Flat/Round :
to assemble a flat conductor to a round conductor.

Connection Round/Round :
to assemble two round conductors

- **15101/15102/15103/15104/15108/15109**


Ref. 15101


Ref. 15102


Ref. 15103


Ref. 15104


Ref. 15108


Ref. 15109

Ref. 15101/15102

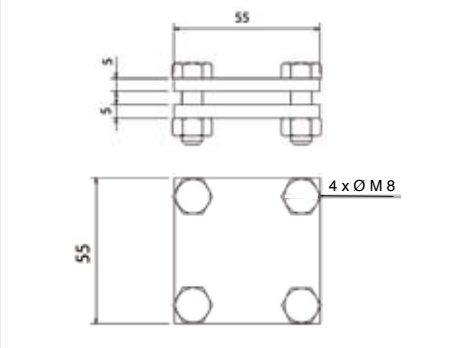

Ref. 15103/15104

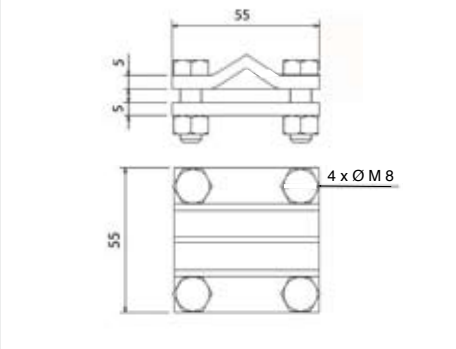

Ref. 15108/15109

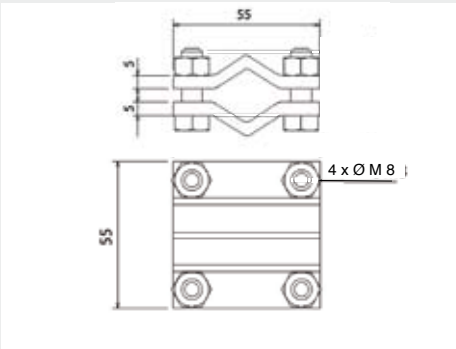

Ref	Designation	Material	Dimensions	Weight
15101	Plate / Plate	Tinplated copper	55 x 55 mm	330 g
15102	Plate / Plate	Copper	55 x 55 mm	330 g
15103	Plate /round	Tinplated copper	55 x 55 mm	330 g
15104	Plate /round	Copper	55 x 55 mm	330 g
15108	Round /round	Copper	55 x 55 mm	330 g
15109	Round /Round	Tinplated copper	55 x 55 mm	330 g

> Conductors interconnection >

Join

Connection Flat/Flat :
to assemble two flat conductors.

Connection Flat/Round :
to assemble a flat conductor to a round conductor.

Connection Round/Round :
to assemble two round conductors

- **15110**

Ref. 15110

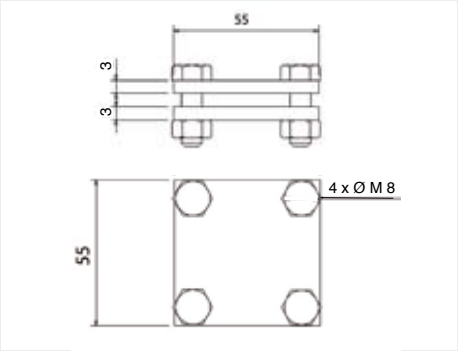

- **15111**

Ref. 15111

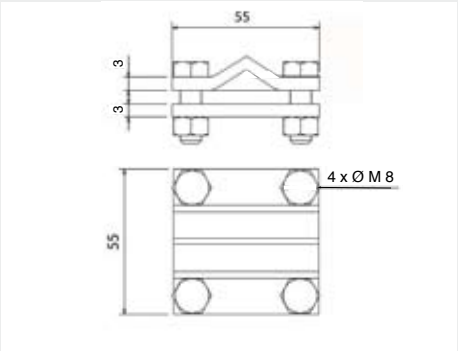

Ref	Designation	Material	Dimensions	Weight
15110	Plate / Plate	S/s 304 L	55 x 55 mm	330 g
15111	Plate / Round	S/s 304 L	55 x 55 mm	330 g

> Conductors interconnection >

Connecting collar

Collar connection to fix strip or round sections to the air terminal support (pole or mast).

- **15301/15305/15305**

Ref. 15301

Ref. 15303

Ref. 15305

Ref	Designation	Material	Dimensions
15301	Connection collar	Tinplated copper	58 x 55 mm
15303	Connection collar	Copper	58 x 55 mm
15305	Connection collar	Stainless Steel	58 x 55 mm

Ref. 15301/15303/15305

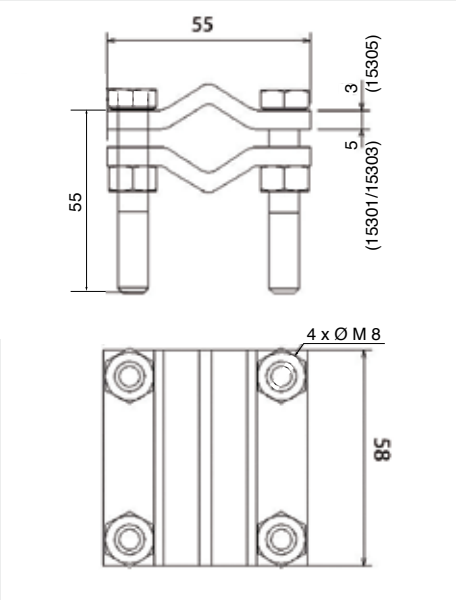

- **15302/15306**

Ref. 15302

Ref. 15306

Ref	Designation	Material	Dimensions
15302	Connection collar	Tinplated copper	73 x 55 mm
15306	Connection collar	Stainless Steel	73 x 55 mm

Ref. 15302/15306

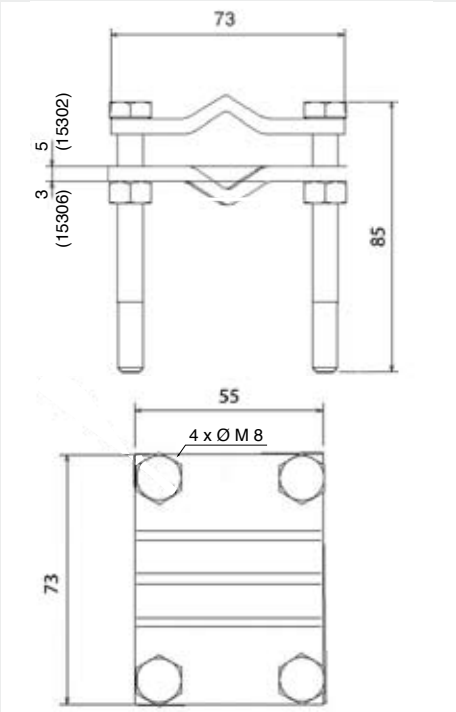

> Earthing system >

Inspection joint

Disconnection between the down-conductor and the earth to check the resistance of earthing.

- **16001**

Ref. 16001

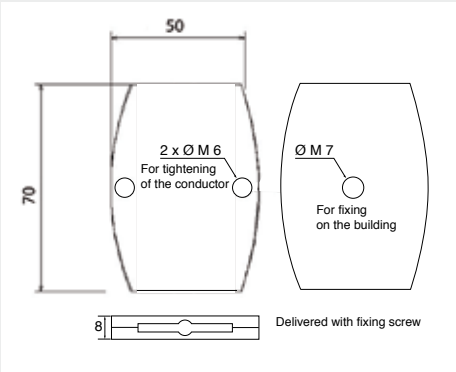

Ref	Designation	Material	Dimensions	Weight
16001	Inspection joint	Tinplated brass	55 x 70 mm	320 g

Protection sheath

Mechanical protection of flat or round conductors for down-conductors
Supplied with 3 fixation collars in stainless steel

- **16003/16007**

Ref. 16003/16007

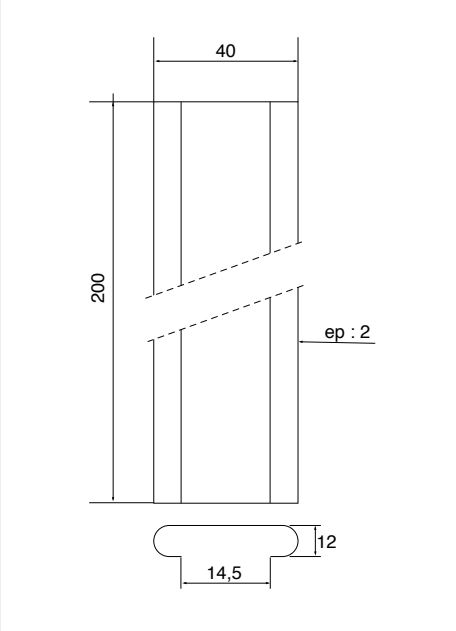

Ref	Designation	Material	Legnth	Weight
16003	304L Sheath	S/s 304L	2 m	840 g
16007	316L sheath	S/s 316L	2 m	840 g

> Earthing system >

Inspection pits

Protected access to the earthing system of lightning protection

- **16004/80136/80137**

Ref. 16004/80136/80137

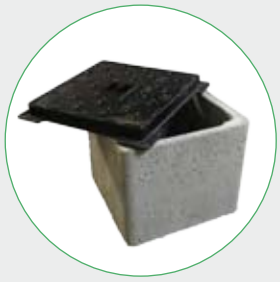

Ref	Désignation	Material	Dimensions	Weight
16004	Plastic inspection pit	PVC	18 x 9 cm	430 g
80136	Concrete inspection pit	Concrete base	25 x 25 x 25 cm	14 kg
80137	Concrete inspection pit	Cast iron cover	31 x 31 x 3 cm	5 kg

Earth connectors

Connector for several earthing conductors, for "crow-foot" branched earth .Only for plate conductors.

- **16005**

Ref. 16005

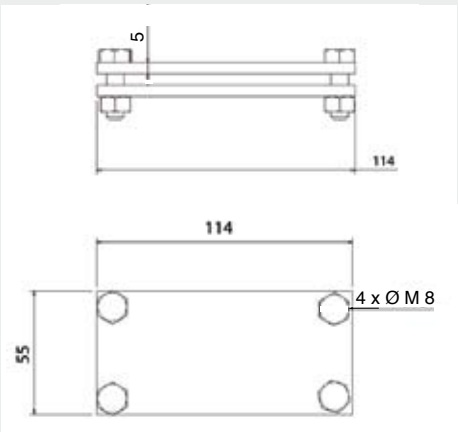

Ref	Designation	Material	Dimensions	Weight
16005	Crow's foot branched connector	Copper	114 x 55 x 5 mm	600 g

> Earthing system >

Signaling plate

Signalling plate indicating presence of Air Terminal earthing (Supplied with ankles and screw)

- **16006/16008/16009**

Ref	Designation	Material	dimensions	Weight
16006	Signaling plate Earth	Aluminium	10 x 8,5 cm	20 g
16008	Signaling plate Danger (grey)	Aluminium	11 x 16 cm	63 g
16009	Signaling plate Danger (yellow)	Aluminium	11 x 16 cm	63 g

Ref. 16006/16008/16009

Earth rod

To make in-depth earthing systems

- **16105/16106**

Ref. 16105/16106

Ref	Designation	Material	Diameter	Legnth	Weight
16105	Earth rod 150	Stainless Steel	16 mm	1,5 m	2,1 kg
16106	Earth rod 200	Stainless Steel	16 mm	2 m	3,2 kg

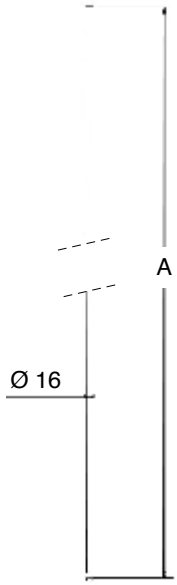

Ref	A
16105	1500
16106	2000

Our products / Protection against direct effects of lightning

> Earthing system >

Coupling sleeve

Coupling sleeve to join two earth rods
Driving tip to insert rod without damaging it

- **16113/16133**

Ref. 16113

Ref. 16133

Ref	Designation	Material	dimensions	Weight
16113	Coupling sleeve	Stainless Steel	20 x 75 mm	100 g
16133	Driving tip	Steel	22 x 97 mm	170 g

Ref. 16113

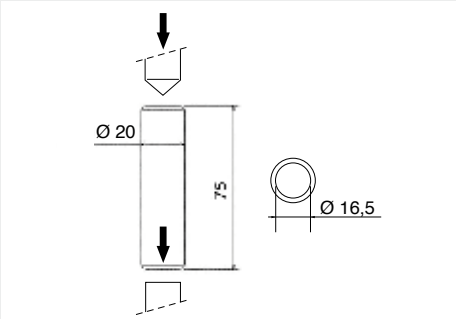

Ref. 16133

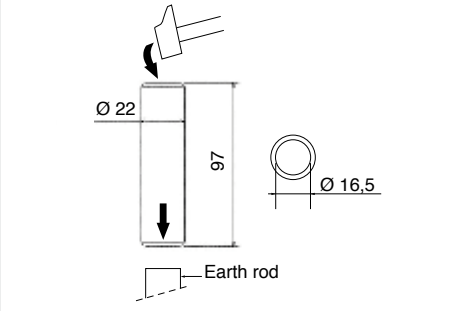

Rod connectiong collar

These rod connecting collars are used to connect the down-conductor of the Air terminal to the earth rods

- **16121/16126**

Ref. 16121

Ref. 16126

Ref	Designation	Material	Dimensions	To use with	Weight
16121	Round collar	Brass	40 x 22 mm	Round conductor	76 g
16126	Round collar 2	Brass	40 x 22 mm	Plate conductor	120 g

Ref. 16121

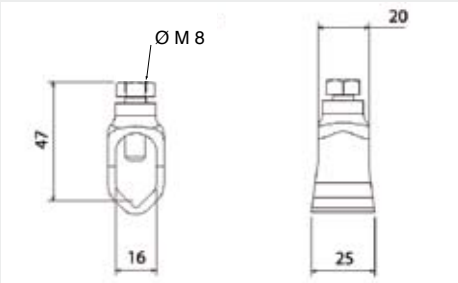

Ref. 16126

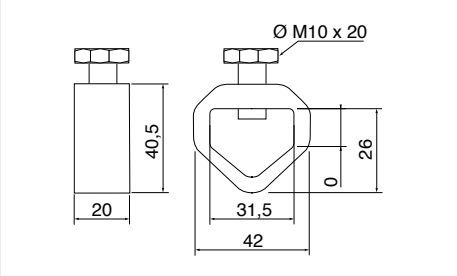

> Earthing system >

Rod connectiong collar

- **16124/16125**

Ref. 16124

Ref. 16125

Ref. 16124

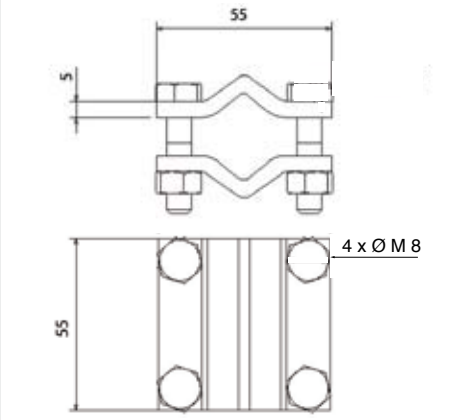

Ref. 16125

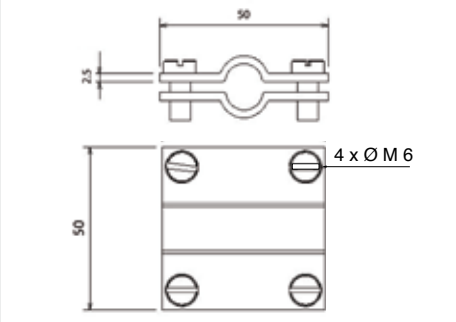

Ref	Designation	Material	Dimensions	To use with	Weight
16124	Plate collar	Copper	55 x 55 mm	Plate conductor	350 g
16125	Plate collar 2	Copper	50 x 50 mm	Plate conductor	140 g

Earthing mesh

Copper earthing mesh enabling better distribution of lightning current.

- **16150/16151**

Ref. 16150/16151

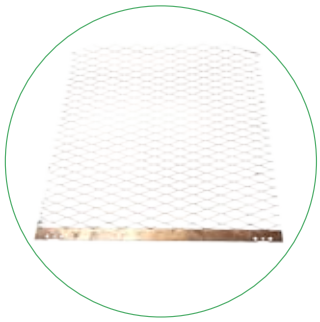

Ref	Designation	Material	dimensions	Weight
16150	Square	Copper	1 x 1 m	4 kg
16151	Expanded	Copper	1,4 x 0,45 m	1,5 kg

Our products / Protection against direct effects of lightning

> Earthing system >

Enhancing compound

TERRAGONIX ADVANTAGES :

- Permanent contact with the earth conductor
- Expansion of granules all around the conductor
- No alteration of earth resistance value. The water streaming won't damage the earth system
- Great stability of the earth value

• **16202**

Ref. 16202

Ref	Designation	Material	Weight
16202	Terragonix	Bucket of granules	20 kg

Improves ground resistance and therefore significantly improves the resistance values of the earthing system.

Very easy to use. (granules / expansion)
Ideal solution for hard soil (sands, rocks, …)

Agreed Product. No pollution of the soil.

> Equipotentiality connection >

Shunt and braid

Equipotentiality connections between the Air terminal conductor and nearby metallic parts or between various metal elements.

- **13005/13009**

Ref	Material	dimensions	Packaging	Weight
13005	Tinplated copper	30 x 3,5 mm	Per meter	0,47 kg
13009	Tinplated copper	30 x 3,5 mm	Shunt (50cm)	0,26 kg

Ref. 13005/13009

Equipotentiality bars

Earthing interconnections.
Allows deconnection for separate earthing measurements.

- **16143/16144**

Ref. 16143

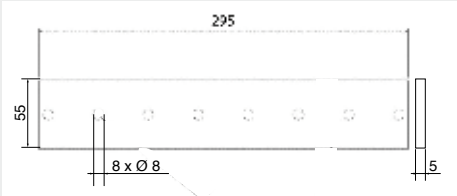

Ref. 16144

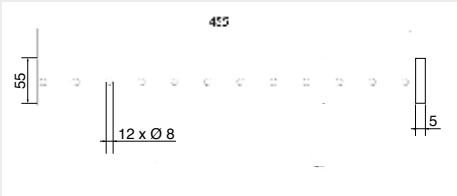

- **80020**

Ref. 80020

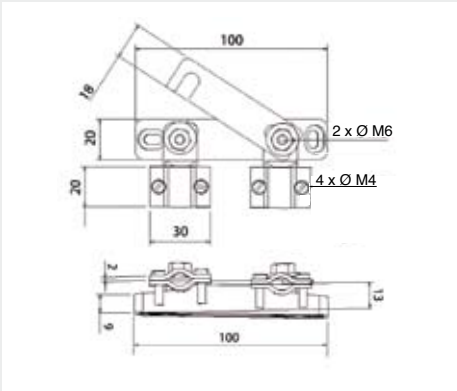

Ref	Designation	Material	Length	Weight
16143	Equipotentiality 6 holes	Copper	295 mm	800 g
16144	Equipotentiality 10 holes	Copper	455 mm	1,2 kg
80020	Earth cut	Copper / plastic	100 mm	120 g

> Equipotentiality connection >

Spark gap

Equipotentiality spark gaps to secure the balance of equipment potentials,the metallic structure and flow of static loads. Surge divesters ensure both balance of potentials on equipment and metal structures and absorption of electrostatic discharge. For instance on roof support, pipelines, protection of insulation joints…

- **23503/20002**

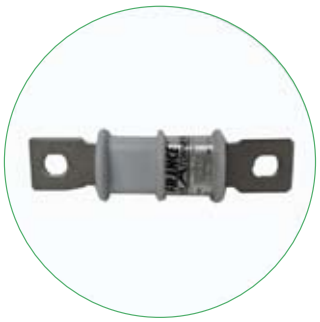

Ref	Name	Nominal voltage	Nominal discharge current	Maximal discharge current	Weight
23503	Equipotentiality spark gap	350 V	10 kA	25 kA	530 g
20002	Antenna surge arrester	200 VDC	25 kA	25 kA	120 g

Our Products for the indirect lightning Protection

Our Products for the indirect lightning protection

> Class I Surge Protective Devices >

1 pole SPD – 25 kA to 50 kA

High impulsed current: 25 kA, 35 kA and 50 kA.
Direct and indirect protection of 1 and 3-phase power supply network installations for areas with high risk of lightning strikes (high keraunic level).
Equipped with a remote and optical fault indicator contact.

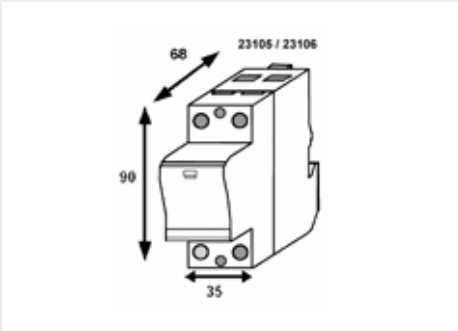

Ref. 23105/23106

• **23105/23106**

Ref	Module	Max voltage Uc	Impulse discharge current I_{imp}	Nominal discharge current I_n	Level of protection under U_p sous I_n	Equipped with a remote fault indicator contact
23105	2	440 VAC	25 kA	25 kA	2 kV	Yes
23106	2	335 VAC	25 kA	25 kA	1,3 kV	Yes

Monobloc SPD – 25 kA

High impulsed current: 25 kA.
Direct and indirect protection of 1 and 3-phase power supply network installations for areas with high risk of lightning strikes (high keraunic level).
Equipped with a remote and optical fault indicator contact.

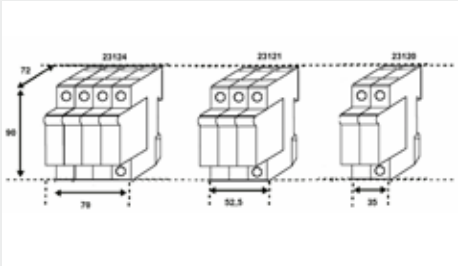

Ref. 23120/23121/23122/23123/23124

• **23120/23121/23122/23123/23124**

Ref	Module	Max voltage Uc	Impulse discharge current I_{imp}	Nominal discharge current I_n	Level of protection under U_p sous I_n	Equipped with a remote fault indicator contact
23120	2 L + N	335 VAC	25 kA	25 kA	1,3 kV	Yes
23121	3 3*L	335 VAC	25 kA	25 kA	1,4 kV	Yes
23122	8 3*L	440 VAC	25 kA	25 kA	2,2 kV	Yes
23123	8 3*L + N	440 VAC	25 kA	25 kA	2,2 kV	Yes
23124	4 3*L + N	335 VAC	25 kA	25 kA	1,4 kV	Yes

Our Products for the indirect lightning protection

> Class I Surge Protective Devices

Monobloc SPD diff – 25 kA and 12,5 kA

High ans standard impulsed current: 25 kA and 12,5 kA.
Direct and indirect protection of 1 and 3-phase power supply network installations for areas with high risk of lightning strikes (high keraunic level).
Equipped with a remote and optical fault indicator contact.

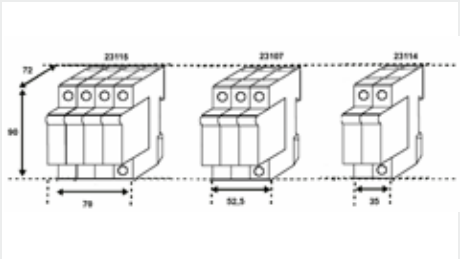

Ref. 23107/23108/23114/23115

• **23107/23108/23114/23115**

Ref	Module	Max voltage U_c	Impulse discharge current I_{imp}	Nominal discharge current I_n	Level of protection U_p under I_n	Equipped with a remote fault indicator contact
23107	L + N diff	335 VAC /255	25 kA /50	25/ 50 kA	1,5/ 2,5 kV	Yes
23108	3 L + N diff	335 VAC /255	25 kA /100	25/ 100 kA	1,5 / 2,5 kV	Yes
23114	2 L + N diff	335 VAC /255	12,5 kA	25 / 50 kA	1,3/ 1,5 kV	Yes
23115	4 3* L + N diff	335 VAC /255	12,5 kA	25/ 50 kA	1,3/ 1,5 kV	Yes

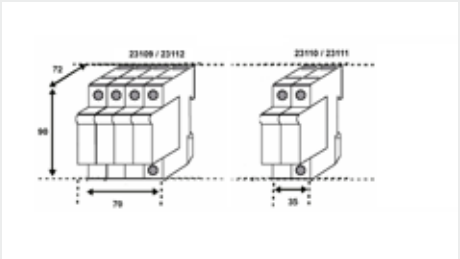

Our Products for the indirect lightning protection

> Class I Surge Protective Devices

1 pole SPD - 12,5 kA

Standard impulsed current:12.5 kA.
Direct and indirect protection of 1 and 3-phase power supply network installations for areas with low risk of lightning strikes (low keraunic level).
SPDs with high impulsed currents (50 kA) for neutral protection of power supply networks.
Equipped with an optical fault indicator contact.

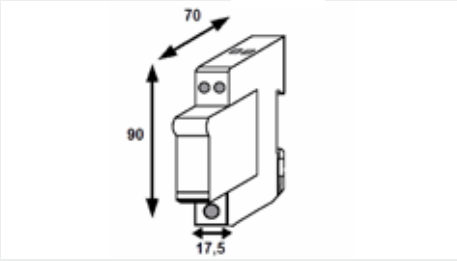

• 23116/23118

Ref. 23116/23118

Ref	Module Network	Max voltage U_c	Impulse discharge current I_{imp}	Nominal discharge current I_n	Level of protection U_p under I_n	Replacement plug	Equipped with a remote fault indicator contact
23116*	1	440 VAC	12,5 kA	20 kA	1,8 kV	23117	No
23118*	1	335 VAC	12,5 kA	20 kA	1,4 kV	23119	No

* Pluggable model

> Class I - II Surge Protective Devices

Monobloc SPD - 12,5 kA

Standard impulsed currents:12.5 kA.
Direct and indirect protection of 1 and 3-phase power supply network installations for areas with low risk of lightning strikes (low keraunic level).
Equipped with a remote and optical fault indicator contact.

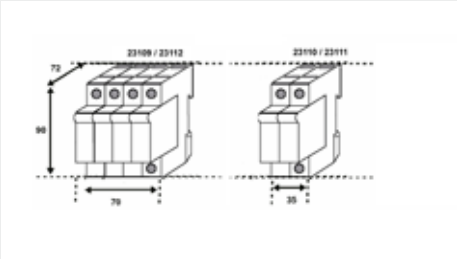

• 23109/23110/23111/23112

Ref. 23109/23110/23111/23112

Ref	Module Network	Max voltage U_c	Impulse discharge current I_{imp}	Nominal discharge current I_n	Level of protection U_p under I_n	Equipped with a remote fault indicator contact
23109	43L+N	440VAC	12,5 kA	20 kA	2,1 kV	Yes
23110	2 L + N	440 VAC	12,5 kA	20 kA	1,9 kV	Yes
23111	2 L + N	335 VAC	12,5 kA	20 kA	1,3 kV	Yes
23112	43*L+N	335 VAC	12,5 kA	20 kA	1,4 kV	Yes

Our Products for the indirect lightning protection

> Class I - Class II Surge Protective Devices

1 pole SPD - 50 kA - Protection of the neutral

Discharge currents of 50 kA.
Direct and indirect protection of the neutral of installations for areas with high risk of lightning strikes (high keraunic level)
SPDs with high pulsed currents (50 kA et 100 kA) for neutral protection of power supply networks
Equipped with an optical fault indicator contact.

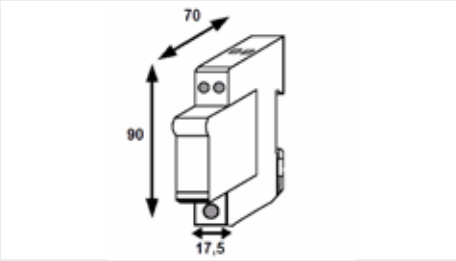

Ref. 23129

- **23129**

Ref	Module Network	Max voltage U_c	Impulse discharge current I_{imp}	Nominal discharge current I_n	Level of protection U_p under I_n	Equipped with a remote fault indicator contact
23129	1	255 VAC	50 kA	50 kA	1,5 kV	No

> Class II Surge Protective Devices

Multipolar SPD - 40 kA

Discharge currents of 40 kA.
Primary protection of 1 or 3-phase power supply network installations situated in exposed areas (high keraunic level) or as a complement to type 1SPD.
Equipped with a remote and optical fault indicator contact.

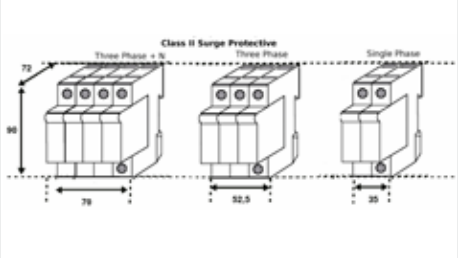

Ref. 23201/23202/23203/23204/23205/23206

- **23201/23202/23203/23204/23205/23206**

Ref	Module Network	Max voltage U_c	Max discharge current I_{imp}	Nominal discharge current I_n	Level of protection U_p under I_n	Replacement plug	Equipped with a remote fault indicator contact
23201	43*L+N	440 VAC	40 kA	15 kA	2 kV	23208	Yes
23202	33*L	440 VAC	40 kA	15 kA	2 kV	23208	Yes
23203	2L+N	440 VAC	40 kA	15 kA	2 kV	23208	Yes
23204	43*L+N	335 VAC	40 kA	15 kA	1,4 kV	23207	Yes
23205	33*L	335 VAC	40 kA	15 kA	1,4 kV	23207	Yes
23206	2L+N	335 VAC	40 kA	15 kA	1,4 kV	23207	Yes

Our Products for the indirect lightning protection

> Class II Surge Protective Devices >

Multipolar SPD – 40 kA

Discharge currents of 40 kA.
Primary protection (in common and differential mode) of 1 or 3-phase power supply network installations situated in exposed areas (high keraunic level) or as a complement to type 1 SPD.
Equipped with an optical fault indicator contact.

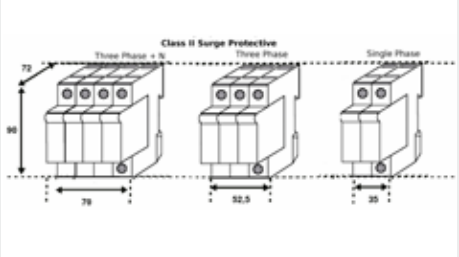

• **23209/23210**

Ref. 23209/23210

Ref	Module Network	Max voltage U_c	Max discharge current I_{imp}	Nominal discharge current I_n	Level of protection U_p under I_n	Replacement plug	Equipped with a remote fault indicator contact
23209	4 3* L+N diff	335 VAC	40 kA	20 kA	1,5 kV	23230 (Phase)	No
23210	2 L+N diff	335 VAC	40 kA	20 kA	1,5 kV	/23211 (Neutral)	No

Compact SPD – 40 kA

Discharge currents of 40 kA.
Primary protection of 1-phase power supply installations situated in exposed areas (high keraunic level) or as a complement to type 1 SPD.
Equipped with optical fault indicator contact

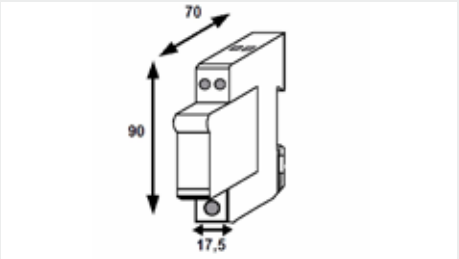

• **23212**

Ref. 23212

Ref	Module Network	Max voltage U_c	Max discharge current I_{imp}	Nominal discharge current I_n	Level of protection U_p under I_n	Replacement plug	Equipped with a remote fault indicator contact
23212	1 L + N	335 VAC	40 kA	20 kA	1,4kV/1,2kV	23213	No

Our Products for the indirect lightning protection

> Class II Surge Protective Devices >

Multipolar SPD – 15 kA

Discharge currents of 15 kA.
Primary protection of 1-phase power supply installations situated in exposed areas (high keraunic level) or as a complement to type 1 SPD.
Equipped with a remote and optical fault indicator contact.

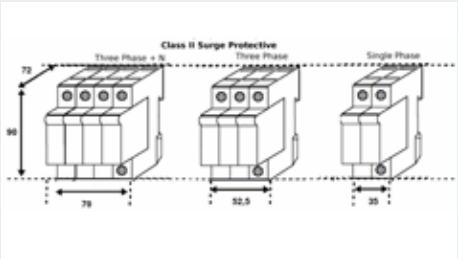

• **23214/23216/23218**

Ref. 23214/23216/23218

Ref	Module Network	Max voltage U_c	Max discharge current I_{imp}	Nominal discharge current I_n	Level of protection U_p under I_n	Replacement plug	Equipped with a remote fault indicator contact
23214	2 L + N	335 VAC	40 kA	20 kA	1,5 kV	23220	Yes
23216	3 3L*	335 VAC	15 kA	5 kA	1,1 kV	23220	Yes
23218	4 3*L + N	335 VAC	15 kA	5 kA	1,1 kV	23220	Yes

> Telephonic, data and network SPD >

Telephonic, data and network SPD – 10 kA

Protection of analog (RTC/ADSL broadband)
and digital (Numéris) telephones.
Examples: modems, faxes, telephones, answering machines, transmitters

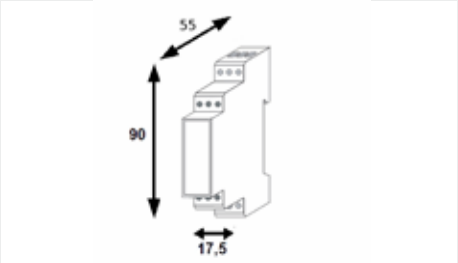

• **23414/23415**

Ref. 23414/23415

Ref	Application	Max discharge current I_{imp}	Nominal discharge current I_n	Level of protection U_p under I_n	Replacement plug
23414	RTC/ADSL	185 VDC	10 kA	5 kA	20403
23415	Numéris	+-7 VDC	10 kA	5 kA	23404

Our Products for the indirect lightning protection

> Renewable photovoltaic and wind systems >

Multipolar class II – 40 kA

Maximum impulsed current: 40 kA.
Direct and indirect protection of photovoltaic and wind generator installations situated in high risk areas of lightning strikes. (high keraunic level).
Equipped with an optical fault indicator contact.

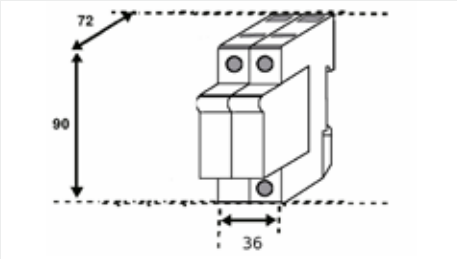

Ref. 23222/23223/23224

- **23222/23223/23224**

Ref	Module Network	Max voltage U_c	Maximal discharge current I_{max}	Nominal dis-charge current I_n	Level of protection U_p under I_n	Replace-ment plug	Equipped with a remote fault indicator
23222	2 PV	550 VDC	40 kA	20 kA	2,1 kV	23227	No
23223	3 PV	1000 VDC	40 kA	20 kA	4 kV	23228	No
23224	1 Wind genera-tor	690 VAC / 900 VAC	40 kA	20 kA	3 kV	23229	No

> Miscellaneous Surge Protective Devices >

Equipotentiality Spark gap

Surge divesters ensure both balance of potentials on equipment and metal structures and absorption of electrostatic discharge.
For instance on roof support, pipelines, protection of insulation joints…

• **23503/20002**

Ref	Application	Max voltage U_c	Max discharge current I_{max}	Nominal discharge current I_n	Weight
23503	Indirect earthing of separate system	350 V	100 kA	10 kA	410 g
20002	Indirect connection of roof support	200 VDC		25 kA	120 g

Ref. 23503/20002

Our Products for the indirect lightning protection

> Miscellaneous Surge Protective Devices >

Surge Protectors Boxes

Ref	
Various models available Please consult us	Please consult us

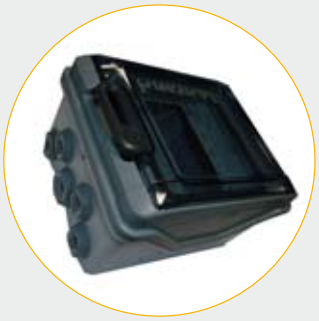

Circuit Breakers

Ref	
Various models available Please consult us	Please consult us

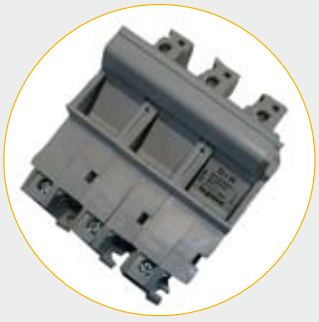

Fuses

Ref	
Various models available Please consult us	Please consult us

Our Products for the indirect lightning protection

> Choice guide and Installation schematic >

Choice guide

France Paratonnerres proposes you a synoptic with simple question (cf page 9) allowing the choice of the Surge Protective Device. France Paratonnerres stay at your disposal to help you in the choice of the SPD the most adapted to your need.

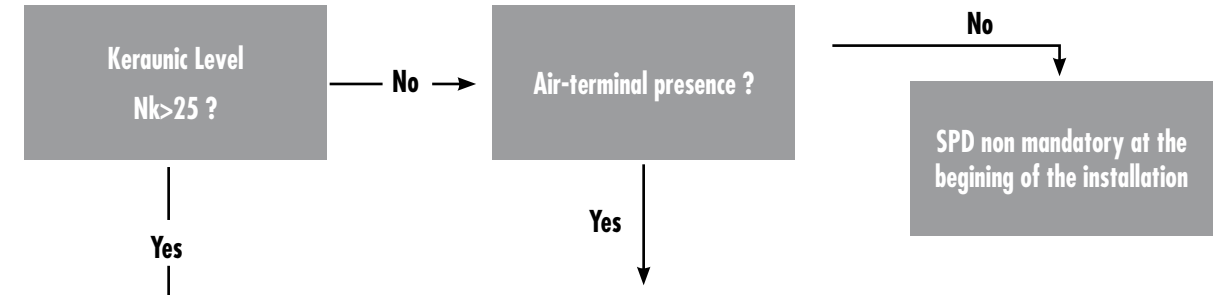

Network	Pole number	Surge Protective Device	
TT - TN (Uc = 335 V)	1	23 106	23 118
	2 (Mono)	23 120	23 111
	3 (Tri)	23 121	
	4 (Tri + N)	23 124	23 112
IT (Uc = 440 V)	1	23 105	23 116
	2 (Mono)	23 110	
	3 (Tri)	23 122	
	4 (Tri + N)	23 109	23 123

Network	Pole number	Surge Protective Device	
TT - TN (Uc = 335 V)	2 (Mono)	23 206	23 212
	3 (Tri)	23 205	23 216
	4 (Tri + N)	23 204	23 218
IT (Uc = 440 V)	2 (Mono)	23 203	
	3 (Tri)	23 202	
	4 (Tri + N)	23 201	

Our Products for the indirect lightning protection

> Choice guide and Installation schematic >

Principle of SPD installation

When chosen and selected according to the equipment to be protected, and in order to be the most efficient, the SPDs have to be installed with respect to the schematic below :

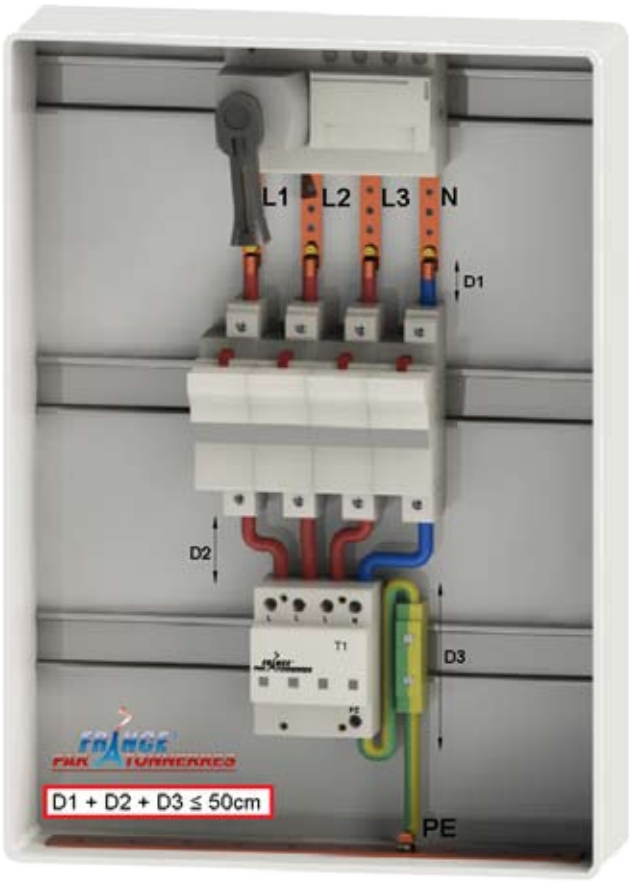

Prevention Range

Prevention Range

> Thunderstorm Detector >

GAIA

The **GAIA®** is an electromagnetic thunderstorm activity detector. It enables the detection of electromagnetic field generated by lightning, within a 15 km radius from its bidirectional antenna.

The **GAIA®** antenna is connected to a processing unit, which provides thunderstorm alerts while a thunderstorm is
nearing the installation site. It enables:

- 1. To ensure, with a bargraph, an information report on the approach and thunderstorm intensity activity.
- 2. To measure the thunderstorm presence on site.
- 3.To alert, with a visual and sound signal, about the need to initiate a safety procedure for the site (adaptable settings).
- 4.To ensure a vigilance during and after the thunderstorm, and an "all clear" signal.
- 5. To count and memorize the lightning events on the site.
- 6. To reset.

The **GAIA®** device enables:

- To improve the security of human lives, with a lightning risk warning of at least 15 minutes.
- To analyse the exposition risk of the site, and to check if the existing protection systems are adapted.
- An optional interface for follow-up and customized advice from France Paratonnerres.
- An easy installation, and an interferences filtering.

• **80319**

Ref. 80319

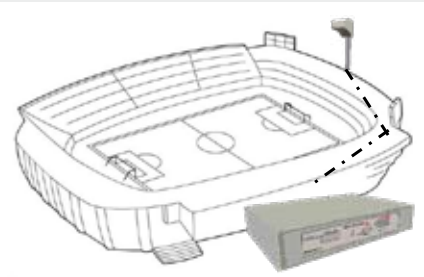

Prevention Range

> Thunderstorm Detector

GAIA

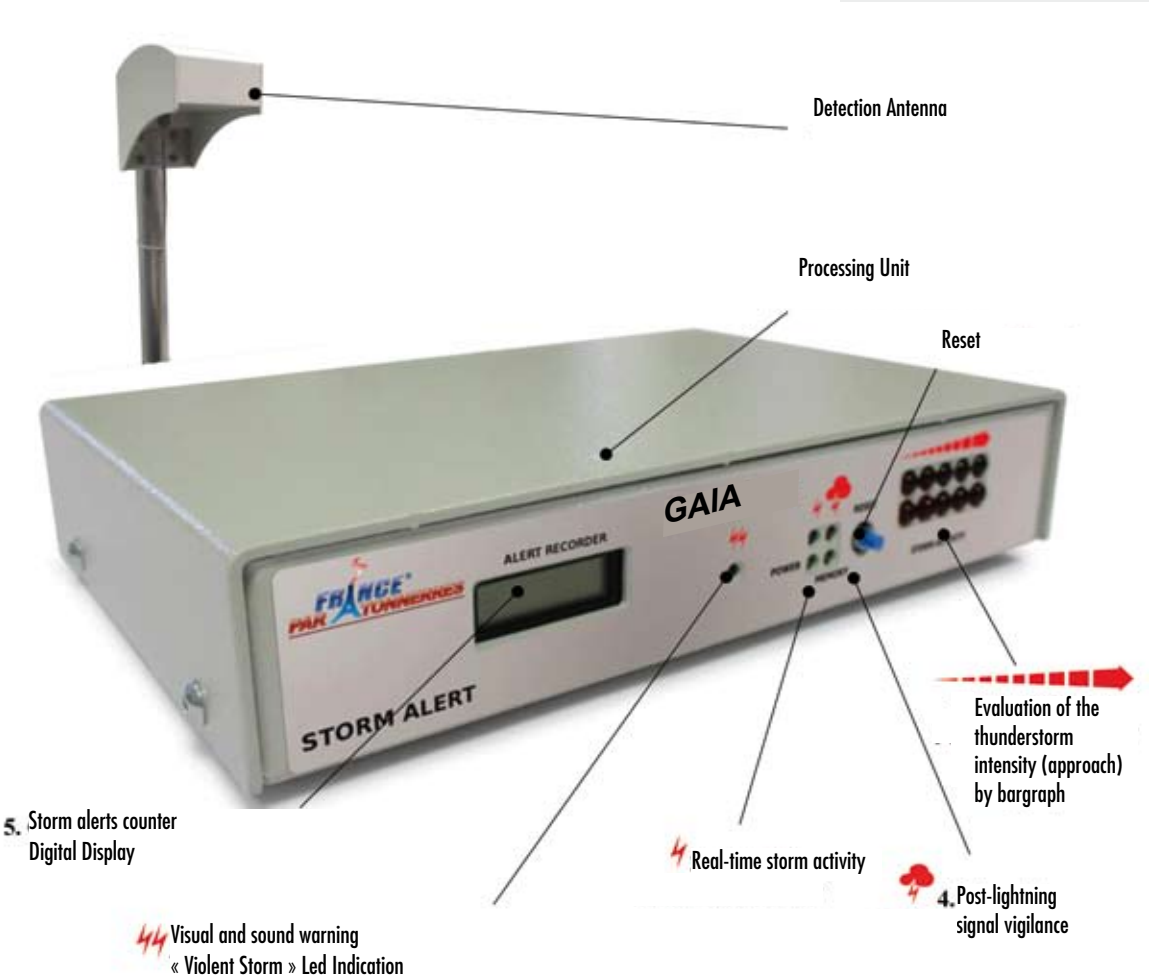

Ref		Dimension	Weight (g)	Protection Index	Connection Kit / Power supply	Electrical Consumption	Detection radius	Operating temperature	Standard
80319	**Processing Unit**	38 x 130 x 214 mm	250	IP 20	Universal adapter 90-264 VAC, 50/60 Hz / 24VDC	110 mA	15 km	-20°C to +60°C	NF EN 50536
	Antenna	130 x 170 x 190 mm	960	IP 66	Shielded cable 15m Connector SubD9				

> Thunderstorm Detector >

DEROMAS

PORTABLE THUNDERSTORM ALARM

The portable Thunderstorm Alarm France Paratonnerres is a safety device which enables to warn the user against the thunderstorm risks:

• Safety:
It ensures the safety of the professional teams working outside, the athletes,
the operation staff.
Through a constant monitoring, it triggers a visual (red) and sound alert, indicating the need to seek a shelter.
• Ergonomics :
It is adaptable to a belt, a bag, a uniform, thanks to a clip.
• Low consumption:
Up to 100h of autonomy and reliable functioning with 2 LR3 batteries (included).
• Autonomy :
The device shuts off after 2 hours without lightning detected.
• Quick and efficient:
Start-up is done by simply pressing the button, the device measures the thunderstorm approach and distance, follows its
It ensures simultaneously the evaluation of the batteries power level.
The Thunderstorm Alarm France Paratonnerres is an ergonomic alert device.
It provides a vigilance and an alert signal during the approach of a thunderstorm.
Its great detection ability enables to forecast a thunderstorm presence up to 64 km away, and to determine its evolution and direction.
When there is a thunderstorm, a beep sound is audible.
In addition, LEDs are illuminated according to a lightning distance range (39-64 km, 19-39 km, 10-19 km and less than 10 km).

• **80320**

Ref. 80320

Ref	Dimension	Detection range	Weight	Power supply	CEM standards	Warranty
80320	20 x 50 x 70 mm	Up to 64 km away	80 g	2 AAA LR3 Batteries (included)	EN 61000-6-3 / EN 61000-6-1 / EN 61000-4-3 /EN 55022 Class B / N 61000-4-2	1 year

> Thunderstorm Detector

Storm detector

Consists of two parts :
a detecting antenna and a control box connected with 3 different length of cables.

[A nomad version is also available (Ref. 80161),

[The antenna is fixed on the upper part of a mast.
Permanent control of the storm activity. (in a radius from 5 to 10 km).

[A bright scale indicates the perturbation level generated by the storm.
Two levels of alert are available. They are adjustable.

When the risk level is overpass, the storm alert is signalized with a contact, a beep and a fast blinking.

Ideal for mobile military sites.

For installations with high lightning risks or very sensitive
(petrol stock, chemistry, golfs, aeronautic sites ...)

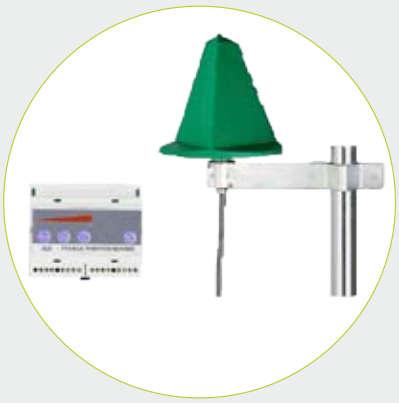

- **80158/80159/80160/80161**

Ref. 80158/80159/80160/80161

Ref	Power supply	Detection radius	length of cable	Wei-ght	Associated testing box
80158	5,5 à 7 VDC / 12 à 48 VDC / 12 à 24 VAC	5 to10 km	10 m	6 kg	80162
80159	5,5 à 7 VDC / 12 à 48 VDC / 12 à 24 VAC	5 to10 km	20 m	12 kg	80162
80160	5,5 à 7 VDC / 12 à 48 VDC / 12 à 24 VAC	5 to10 km	30 m	18 kg	80162
80161	5,5 à 7 VDC / 12 à 48 VDC / 12 à 24 VAC	5 to10 km	0 (Nomad)	5 kg	80162

Accessories

Accessories

> Accessories >

Earth resistance tester

Measures ground conductivity and electrical resistance of earths or lightning. Practical and user-friendly.
Included in the kit :

- 4 lengths x 25 m of wire section (red, green, blue and black)
- 4 stainless steel measuring rods

Optional bag (ref. 16175)

• **16174**

Ref. 16174

Ref	Power supply	Auto-nomy	Dimensions	Weight
16174	9V VDC (6 rechargeable batteries provided)	20 hours	140 x 80 x 230 mm	6 kg

Geiger counter

Light and easy to use, this Geiger counter detects radioactive air terminals over several metres as well as any other radioactive element.

Measure of Beta particles, X and Gamma rays.

In order to control the working of the counter, and to detect the radioactive sources, a beep is generated when a ionization is created in the tube.So, when you are near a radioactive element, the cadence of beeps accelerates.

- Technical characteristics:

Range of measure: de 5 à 999 Rem/h ou de 0,05 à 9,99 Sv/h
Bêta rays : 350 keV à 1,5 MeV
Gamma rays : 0,1 à 1,25 MeV
Power supply: 2x1,5 V batteries (LR03 included)

• **30041**

Ref. 30041

Ref	Description	Detection	Dimensions	Weight
30041	Geiger counter	X rays Gamma rays Bêta particles	150 x 60 mm	90 g (without batteries)

> Accessories >

Hooping buckles

Fixing Air Terminals with hooping buckles especially for chimneys.

- **12005/12111/80120**

Ref. 12005/12111/80120

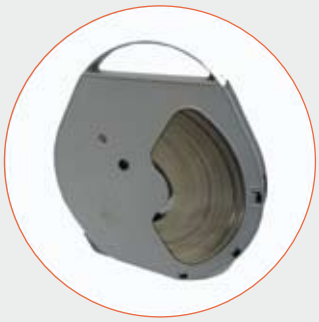

Ref	Material	Width	Thickness	Packaging	Weight
12005	Galvanized Steel	40 mm	0,7 mm	Rouleaux de 25 m	4,5 kg per roll
12111	Stainless steel	20 mm	0,7 mm	Rouleaux de 50 m	5,65 kg per roll
80120	Stainless steel	10 mm	0,4 mm	Rouleaux de 50 m	1 kg per roll

Hooping buckles

Fixing Air Terminals with hooping buckles.

- **12112/80080**

Ref. 12112/80800

Ref	Material	Width	buckle	Weight
12112	Stainless steel	20 mm	12111	10 g
80080	Stainless steel	10 mm	80120	4 g

Accessories

> Accessories >

Hoop mounting device

Hoop mounting device

- **12113**

Ref. 12113

Ref	Material	Weight
12113	Galvanized Steel	2 kg

Aluminothermic welding

The aluminothermic welding system Calweld® Multi, is simple and adaptable to ensure earthing circuit connections

[The kit includes:
- 1 pair pliers
- 1 mould for horizontal welding
- 3 moulds for welding on earth rod (Ø 12.5mm, 14.2mm, 17.2mm)
- 2 sachets of 33 fiber washers
- 1 pair of SKK1 pliers
- 1 tool kit
- 1 mould scraper
- 1 instruction manual

- **16300**

Metal / Moulds / Accessories ...

Please consult us

Ref. 16300

Ref	Designation	Weight
16300	Kit Caldweld® Multi	2 kg

Accessories

Bolt

Stainless Steel bolt with ankle

- **12008**

Ref. 12008

Ref	Material	Diameter	Length	Weight
12008	Stainless Steel	M 10	50 mm	92 g

Mansonry lead peg for brickdowm clamp

For brickwork clamp. Ref. 14001/14003/14005

- **14004**

Ref. 14004

Ref	Material	Weight
14004	Lead	6,2 g

GBolt FIX II M10 95/36

For fixation. (M10)

- **85037**

Ref. 85037

Ref	Material	Diameter	Length	Weight
85037	Galvanized steel	M 10	95 mm	62,5 g

Accessories

Accessoires

Roof ornements

Different sized rooster ornaments to fix on steeples

- **18101/18102/18105/18106/18108**

Ref	Style	Material	Size	Mounted on	Weight
18101	Gaulois	Copper	63 cm	Ball and bronze pebbles	4,9 kg
18102	Gaulois	Copper	75 cm	Ball and bronze pebbles	5,9 kg
18105	Gaulois	Copper	63 cm	Bronze pebbles	3,8 kg
18106	Gaulois	Copper	75 cm	Bronze pebbles	4,8 kg
18108	Gothique	Copper	63 cm	Bronze pebbles	4,9 kg

> Accessoires >

Sheath

Sheath with ball bearing on bronze pebble.

- **18020**

Ref. 18020

Ref	Material	Dimensions	Weight
18020	Copper	43 cm	1,1 kg

Cardinal points N.S.E.W

- **18110**

Ref. 18110

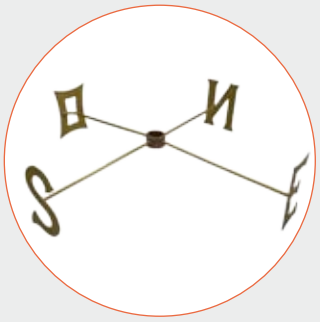

Ref	Material	Dimensions	Weight
18110	Brass	65 cm	1,1 kg

Accessories

Certifications

Company and Information System Certification

> Iso 9001 Certification >

BUREAU VERITAS
Certification

FRANCE PARATONNERRES

9 RUE COLUMBIA - PARC ESTER TECHNOPOLE
87068 LIMOGES - FRANCE

Bureau Veritas Certification France certifie que le système de management de l'organisme susmentionné a été audité et jugé conforme aux exigences de la norme :

Standard

ISO 9001:2015

Domaine d'activité

RECHERCHE, DEVELOPPEMENT, FABRICATION ET COMMERCIALISATION DE DISPOSITIFS DE PROTECTION FOUDRE.
ETUDE, REALISATION ET MAINTENANCE DES INSTALLATIONS DE PROTECTION FOUDRE.
EXPERTISE EN PROTECTION FOUDRE.

RESEARCH, DEVELOPMENT, MANUFACTURING AND MARKETING OF LIGHTNING PROTECTION SYSTEMS.
STUDY, REALISATION AND MAINTENANCE OF LIGHTNING PROTECTION INSTALLATIONS.
ASSESSMENT IN LIGHTNING PROTECTION.

Date de début du cycle de certification : **08 mai 2017**

Sous réserve du fonctionnement continu et satisfaisant du système de management de l'organisme, ce certificat est valable jusqu'au : **11 mars 2020**

Certificat n° : **FR034743-1** Date: **23 mai 2017**

Affaire n° : **6425447**

Jacques Matillon - Directeur général

Adresse de l'organisme certificateur : Bureau Veritas Certification France
60, avenue du Général de Gaulle – Immeuble Le Guillaumet - 92046 Paris La Défense

Des informations supplémentaires concernant le périmètre de ce certificat ainsi que l'applicabilité des exigences du système de management peuvent être obtenues en consultant l'organisme.
Pour vérifier la validité de ce certificat, vous pouvez téléphoner au : **+ 33 (0)1 41 97 00 60**.

cofrac
CERTIFICATION DE SYSTEMES DE MANAGEMENT

> Qualifoudre Certification >

Qualifoudre INERIS

INERIS

PROFESSIONNELS DE LA PROTECTION CONTRE LA FOUDRE

CERTIFICAT DE CONFORMITÉ

051168729019

L'Institut National de l'Environnement Industriel et des Risques (INERIS), Etablissement Public à Caractère Industriel et Commercial créé par le décret n° 90-1089 du 7 Décembre 1990, sous la tutelle du ministère de l'environnement, délivre la présente attestation de conformité au référentiel QUALIFOUDRE version 3.3 du 18 octobre 2013, à la Société suivante:

FRANCE PARATONNERRES
Parc Ester Technopole
9 rue Columbia
87068 LIMOGES

Les moyens mis en œuvre par cette société, après examens et audit (dossier INERIS N°173751), sont reconnus conformes aux spécifications du référentiel QUALIFOUDRE qui portent sur le système de management de la qualité, les méthodes de travail, la qualification et la formation des personnes suivant les rubriques utiles du référentiel indiquées ci-dessous :

Fabrication de paratonnerres
Fabrication de parafoudres
Analyses du risque foudre
Etudes Techniques
Installations
Vérifications

Ce certificat est valable jusqu'au 6 juin 2021.

Verneuil-en-Halatte, le 7 juin 2018.

INERIS France

Le Directeur Général de l'INERIS,
Par délégation,
Le Responsable du Pôle Certification
D. CHARPENTIER

Parc Technologique Alata - BP 2 - F-60550 Verneuil-en-Halatte
tél + 33(0)3 44 55 66 77 **fax** + 33(0)3 44 55 66 99 **internet** www.ineris.fr

Institut national de l'environnement industriel et des risques
Etablissement public à caractère industriel et commercial - RCS Senlis B 381 984 921 - Siret 381 984 921 00019 - APE 7120B

Product Certification

> UL Certification >

CERTIFICATE OF COMPLIANCE

Certificate Number	20180105-E493082
Report Reference	E493082-20180103
Issue Date	2018-JANUARY-05
Issued to:	France Paratonnerres Parc Ester Technopole 9 Rue Columbia 87068 LIMOGES FRANCE
This is to certify that representative samples of	EARLY STREAMER EMISSION AIR TERMINALS CERTIFIED TO NF C 17-102 Early Streamer Emission Air Terminals, Cat No. IONIFLASH MACH NG60
	Have been investigated by UL in accordance with the Standard(s) indicated on this Certificate.
Standard(s) for Safety:	NF C 17-102, French Standard for Protection against Lighting: Early Streamer Emission Air Terminal.
Additional Information:	See the UL Online Certifications Directory at www.ul.com/database for additional information

Only those products bearing the UL Certification Mark should be considered as being covered by UL's Certification and Follow-Up Service.

Look for the UL Certification Mark on the product.

Bruce Mahrenholz, Director North American Certification Program

UL LLC

Any information and documentation involving UL Mark services are provided on behalf of UL LLC (UL) or any authorized licensee of UL. For questions, please contact a local UL Customer Service Representative at http://ul.com/aboutul/locations/

Page 1 of 1

Product Certification

> IONIFLASH MACH® Carbon report

Périmètre	IONIFLASH MACH (in Teq CO2)	IONIFLASH MACH + Accessories (in Teq CO2)
Restraint	99,2	115,2
Life cycle	93,6	109,6
Global	151,2	167,2

> Air-terminal Carbon report

Périmètre	IONIFLASH MACH (in Teq CO2)	IONIFLASH MACH + Accessories (in Teq CO2)
Restraint	33	38
Life cycle	31	37
Global	50	58

> Environmental avdantages of the IONIFLASH MACH®

COMPOSITION

- No électronic parts
- Rate of recycled materials at the maximum authorized by the standards in force
- Optimized manufacture process : Reduces the energy consumption
- Twice lighter in weight : Less material consumed, less pollution in transport

INSTALLATION

- Easy installation's mechanism : economy in energy and cost
- Elaborated in order to avoid energy consumption when it is installed
- Less requested materials : Less cables, total charge of installation reduced
- Life duration until 50 years !

WASTES

- Packaging respectful of the environment ; quality of packages optimized
- Product completely recyclable without previous process

Product Certification

> IONIFLASH MACH Tests

■ Tests were made on the ESE IONIFLASH MACH in the following laboratory :

- CNRS
- Ampère
- GERAC
- Grand Top Europe
- CPRI Bangalore
- SHANGHAÏ JIAO TONG
- LGE Pau

A documentary verification of these test results has been made by Bureau Veritas

France Paratonnerres
Our services

France Paratonnerres / Our services

> Lightning Risk Assesment and Technical Studies >

For complex cases, **France Paratonnerres** uses:

The **IONEXPERT 3000®** enables quickly and easily to determine the Protection Level required, in order to protect efficiently, and according the standard a site.

IONEXPERT 3000® has been developed by **France Paratonnerres**

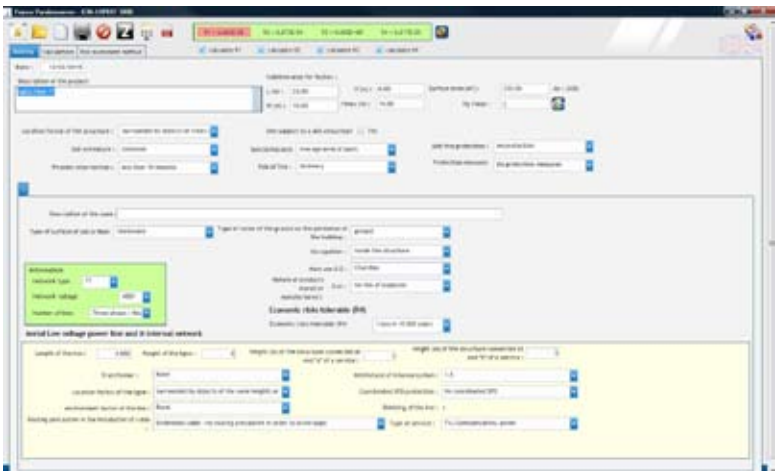

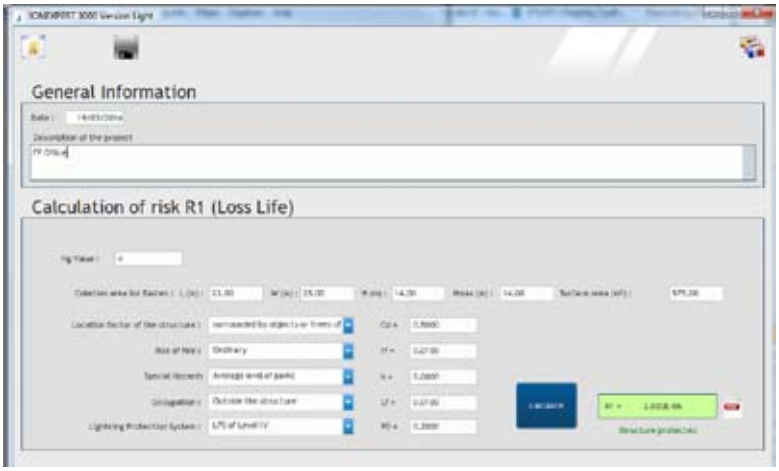

Moreover, this software gives a Quick Technical Study of the site and quick view of the protection radius of the air terminals.

> Lightning Risk Assesment and Technical Studies >

The **France Paratonnerres** Design Office has also developed its own risk evaluation tool based on the information in the practical guide UTE C 17-108 dedicated to the simplified analysis of lightning.

A version of this tool can be obtained online from the company by simple request. **http://www.france-paratonnerres.com**

This software enables depending on the characteristics of the building to be protected :

- Geographical situation
- Location factor
- Dimensions
- Specific danger
- Fire risk
- Occupation of the building
- Existing supply services

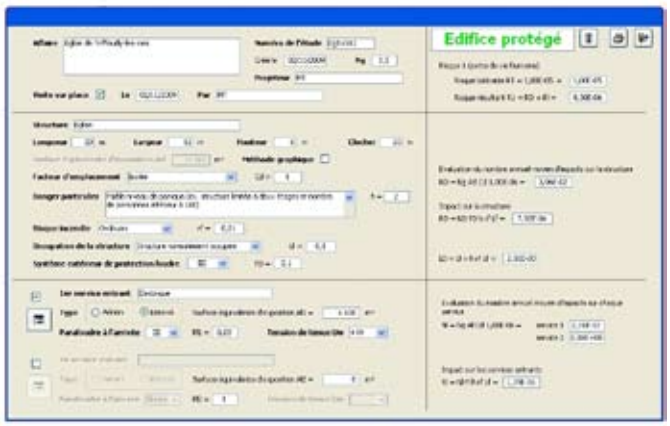

To know if, when an external and internal lightning protection system is present, (according to the four levels of protection available), the building is or is not protected. The software programme identifies the level of risk depending on the characteristics of the building and compares it to a tolerated risk level.

Once the protection level has been chosen the Design Office will establish a technical study with the type of protection to be installed.

France Paratonnerres certified **Qualifoudre** by **INERIS**, is committed to carrying out studies in conformity to standard NF **IEC/EN 62305-2**.

ISO 9001 BUREAU VERITAS Certification

Qualifoudre INERIS N°: 051168729019

Our Design Office is qualified for all types of Lightning Risk Analysis (LRA) and Technical Studies (TS).

The Design Office can manage both :

- **Analyses considered complex as described in standard IEC/EN 62305-2 or NF C 17-102.**
- **Simpler analyses as in the practical guide NF C 17-108.**

Lightning Risk Analysis cannot be prescribed and does not quantify the materials implemented for proposed solutions. These elements are defined by the technical study depending on the protection measures chosen.

Complex Lightning Risk Analysis is managed according to the risk evaluation method as described in standard **IEC/EN 62305-2** and in accordance to the Annex A of the **NFC 17-102** Standard Edition 2011.

Risk evaluation enables the selection of values in consideration of elements in the building which needs protecting. These values will be included in the calculations to find the best level of protection to implement.

France Paratonnerres / Our services

> Information sheet for Lightning Risk Analysis >

FRANCE PARATONNERRES

Information for a study of an analysis for lightning risk

(fill in one file for each building to protect)

YOUR INFORMATION:

Name:

Address:

Postcode: Town: Country:

Tel: Fax: e-mail:

NAME OF THE SITE TO PROTECT:

Department: Town: Country:

TYPE OF BUILDING:

Principal use:

offices ☐ commerce ☐ public entertainment ☐ school ☐ church ☐
hospital ☐ hotel ☐ industry ☐ museum ☐ restaurant ☐
public services ☐ individual house ☐ other:

Nature of the stored products or manufactured products:

Building in project ☐ Building under construction ☐ Building constructed ☐

Building's form:

A ☐ B ☐ C ☐ D ☐ E ☐

Height: m

Total Height: m

Length: m

Width: m

Chimney or steeple height: m

Please give us if possible, the documents which would be useful for our study:
Sketches of the buildings, photos, study of the dangers, exploitation order of the prefect...

Qualifoudre

1/3

103 ind01.doc

> Information sheet for Lightning Risk Analysis >

FRANCE PARATONNERRES

Information for a study of an analysis for lightning risk

CHARACTERISTICS FOR A CHURCH

Does it have:

A cross YES ☐ NO ☐
A style rooster YES ☐ NO ☐
Some bells YES ☐ NO ☐
If yes, are they electrified YES ☐ NO ☐ are they protected by a surge arrester YES ☐ NO ☐

CONSTRUCTION OF THE BUILDING

Structure:
metallic ☐ wood ☐ concrete ☐ other

Roof:
Asphalted terrace roof ☐ gravelled terrace roof ☐ slate roof ☐ tiles ☐ zinc ☐
Concrete fibres ☐ aluminium ☐ copper ☐ thatch ☐ other

Front:
metallic ☐ wood ☐ concrete ☐ stone ☐ bricks ☐ aluminium ☐
other

Type of flooring on the building perimeter:
asphalt ☐ concrete ☐ soil ☐ gravel ☐ other

Nature of the sub-soil:
marshy ☐ clay ☐ sand ☐ granites ☐ sandstone ☐ schist ☐
tender calcareous ☐ compact calcareous ☐ stony ground ☐ vegetable soil ☐
other

PARTICULAR ELEMENTS

Are / is there... ?

Antennas on the roof ☐ number: height:
Chimneys ☐ number: height:
Metallic elements ☐ number: type:
Rising gas column ☐
Electric cables in the front ☐
Electrical earth ground system ☐ Value of the resistance of the electrical earth ground system: Ω
- Made by hooping ☐ Earthing conductor section: mm²
- Made by stakes ☐
- Unknown ☐

INFORMATION FOR THE ASSESSMENT OF THE RISK

Building placement factor

With higher elements ☐ with smaller elements surrounding ☐
isolated ☐ at the top of a hill ☐

Particular dangers

No risk ☐
Low panic risk ☐ medium panic risk ☐ high panic risk ☐
Evacuation difficulties ☐
Dangers for the environment ☐ Contamination of the environment ☐

Fire risk

No risk ☐
Low ☐ ordinary ☐ high ☐ explosion ☐

Anti-fire protection

No protection ☐ manual ☐ automatic ☐
Detection with alarm ☐ firemen intervention: less than 10 min ☐ more than 10 min ☐

Type of flooring inside

Agricultural ☐ asphalt ☐ concrete ☐ wood ☐ ceramic ☐
gravel ☐ sandstone ☐ linoleum ☐ marble ☐ fitted carpet ☐ carpet ☐
other

Qualifoudre 2/3

103 ind01.doc

France Paratonnerres / Our services

> Information sheet for Lightning Risk Analysis >

FRANCE PARATONNERRES

Information for a study of an analysis for lightning risk

EXTERIOR SERVICES

Electric public network

Medium voltage ☐ low voltage ☐

Presence of a High Voltage / Low Voltage transformer:

no ☐ yes in the building ☐ yes in another building ☐

Type of line:

Underground ☐ ground resistance: Ω.m

Aerial ☐ length of the line from another building: m

Relative position:

With higher elements surrounding ☐ with smaller elements surrounding ☐

isolated ☐ at the top of a hill ☐

Environment factor :

Important urban (h > 20m) ☐ urban (20m > h > 10m) ☐

Suburban (h < 10m) ☐ rural ☐

Public telephone network

Type of line:

Underground ☐

aerial ☐ Length of the line from another building: m

Nature of the signal:

analogical (Commuted Telephone Network) ☐ number:

ADSL (Internet) ☐ number:

Digital network (ISDN) ☐ number:

Specialized line ☐ number: voltage : V

Public gas network

Type of pipes

metallic ☐ with isolating joint YES ☐ NO ☐

isolated ☐

Public drinking water network

Type of pipes

Metallic ☐ isolated ☐

INTERIOR SERVICES

Electric distribution

220 V single phase (2 cords) ☐ 380 V triphase + neutral (4 cords) ☐ 380 V triphase (3 cords) ☐

Neutral system:

TT ☐ TN-S ☐ TN-C ☐ IT ☐ unknown ☐

Circuit-breaker at the top:

Strength of the current: A differential: mA selective or delayed ☐

Presence of divisional boards ☐ number:

INSTALLATION LISTED FOR THE PROTECTION OF THE ENVIRONMENT

List of the nomenclature rubrics which need an authorization of exploitation for an industrial site

Qualifoudre

3/3

103 ind01.doc

> Training Seminars >

Training Seminars

France Paratonnerres training proposes two training modules.

- Module n°1 : **Protection against lightning**
- Module n°2 : **Lightning. Analysis and Detailed protection set up**

Module	Subject	Theme	Objective	Skills Required
MODULE 1 **(1 day)**	Protection against Lightning	The Lightning Phenomenon Standards regarding Lightning Protection Establishing protection Demonstration on site	Installers Distributors Architects	None
MODULE 2 **(2 days)**	Lightning Analysis and Detailed protection set up	Effects of lightning Standards and Regulations Lightning Risk Analysis Case studies Protection systems Setting up protection	Engineers Technicians Maintenance engineers Installers	Electrotechnical and Building & Public Works knowledge

Training takes place at the Head Office of **France Paratonnerres**

If you need us to visit a site in France or abroad, please contact us.

Training dates are available on request

France Paratonnerres / Our services

> Take off, Dismantling, Packaging and Storage of radioactive air-terminals

In France, the law decree of October 11th, 1983 forbids the use of radioactive elements in lightning protection

FRANCE PARATONNERRES HAS THE AUTHORIZATION DELIVERED BY THE ASN (THE FRENCH AUTORITY OF NUCLEAR SECURITY) N° 10.04291

We are authorized to :

- Proceed to the dismantling of the radioactive air-terminals.
- Proceed to the packaging of the radioactive air-terminals.
- Proceed to the removal and to the transport safely of the radioactive air-terminals.
- Proceed to the storage of the radioactive air-terminals before the ANDRA's removal.

All the protection and safety measures have been set up with respect to the article R1337-23 of the code of public health.

> Installations

Our teams are qualified to intervene on all types of site, from simple to complex cases classified environmentally protected sites (I.C.P.E.), in accordance with our **Qualifoudre** approval delivered by **INERIS**.

France Paratonnerres can also use the services of partners who are qualified to work on electrical installations, drive aerial work platforms, drill bore-holes, carry out levelling work and so on in order to complete certain installations.

A certificate of conformity to standards can be remitted after work has been carried out.

> Maintenance of sites >





France Paratonnerres ensures maintenance and bringing installations into compliance in accordance to standards :

- **NFC 17-100** of December 1997,
- **NFC 15-100** of December 2002,
- **IEC/EN 62305-3** de 2010,
- **IEC/EN 62305-4** de 2010,
- **NFC 17-102** of September 2011.

and in appliance with the decrees and instructions in force.

- The state and the quality of fixing elements of down conductors, from air terminal systems to earthing
- Conformity of surge protection devices (state, section…)
- Electrical continuity of such devices, where they are placed and how they are routed, notably those with electrical interconnections.
- The conformity to regulations and the distance of security required.
- Resistance values of earthing terminals.
- All equipotentiality connections
- Existence, state and conformity of the surge protector device installation.

> Examples of lightning protection installations

Churches and monuments

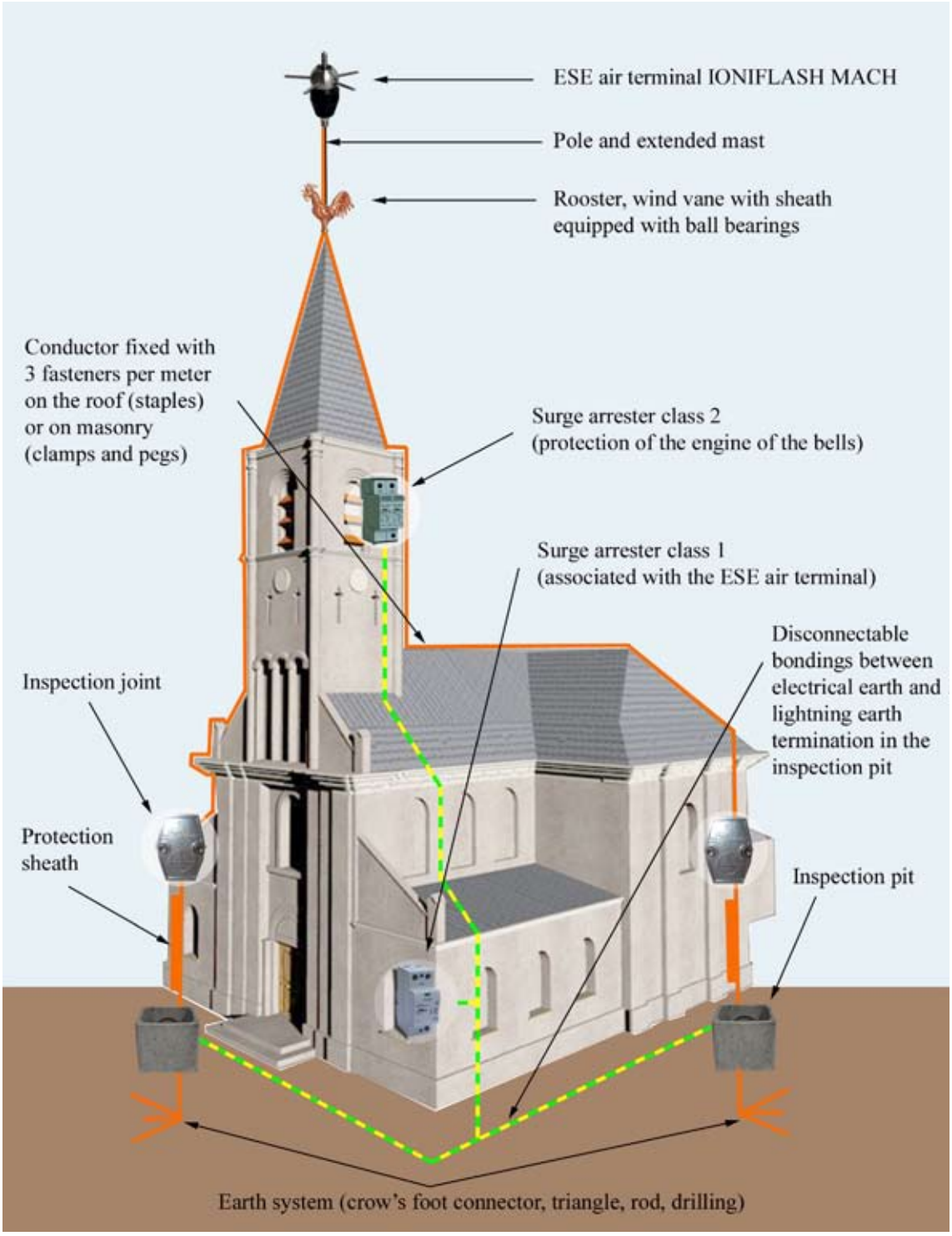

> Examples of lightning protection installations >

Houses and small structures

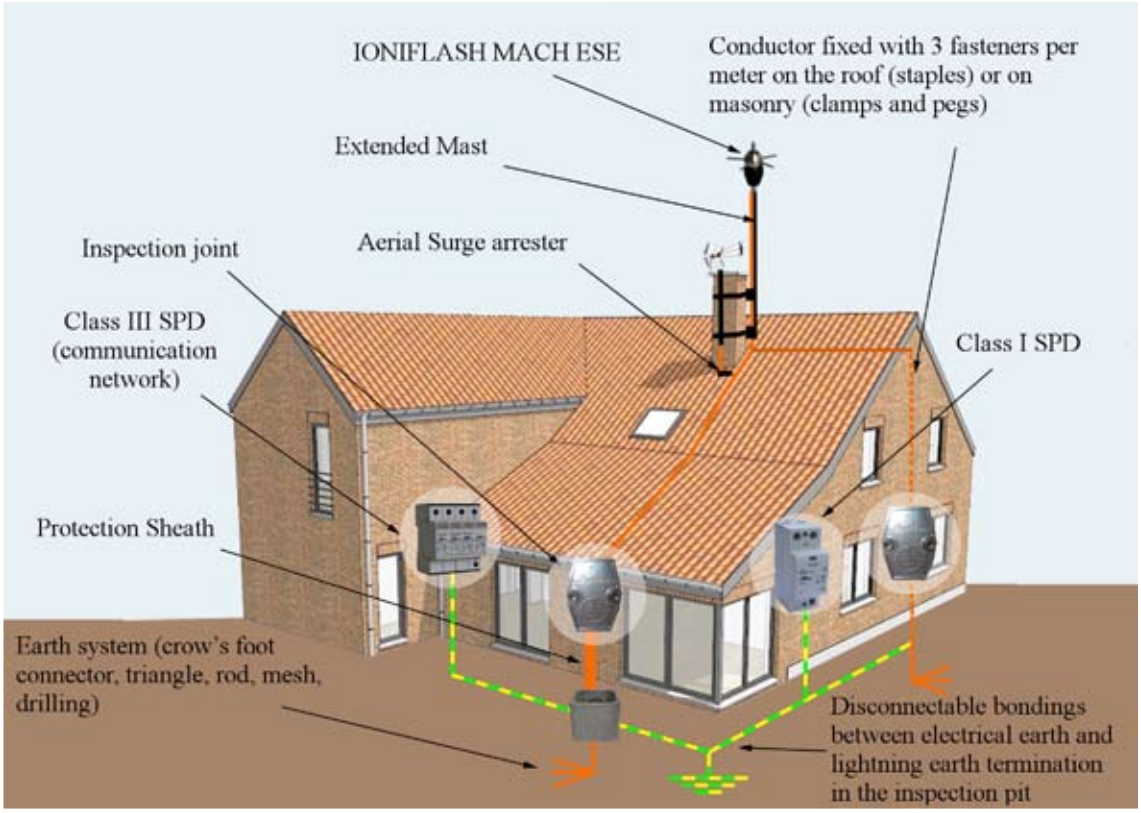

> Examples of lightning protection installations

Pylon

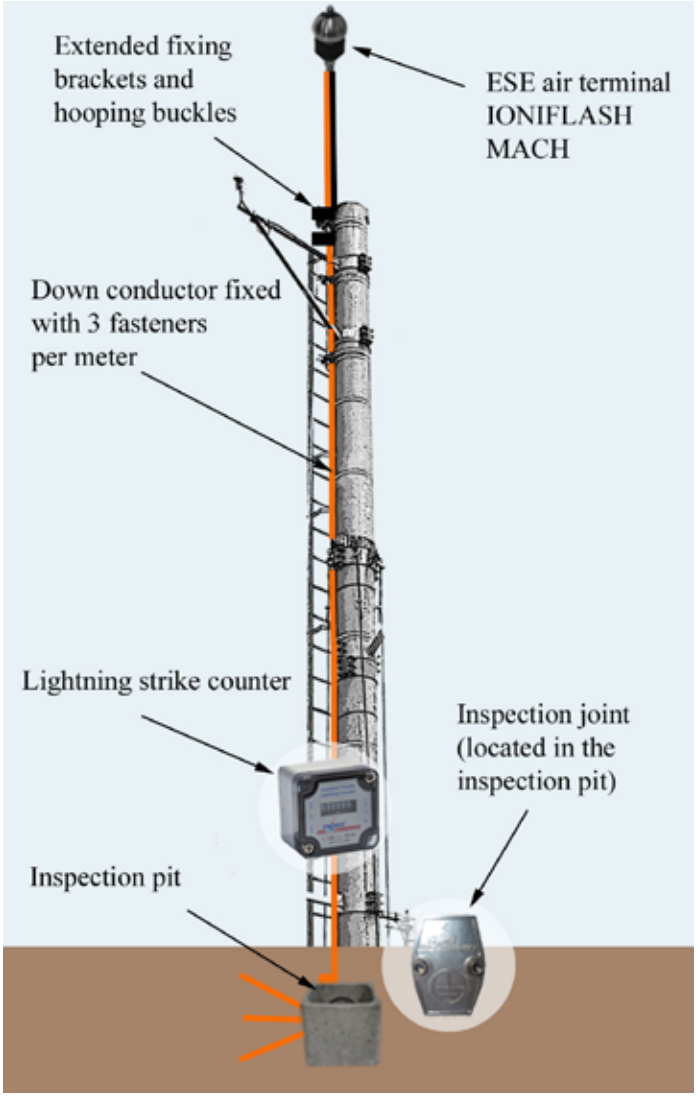

> Examples of lightning protection installations >

Industrial sites and plantations

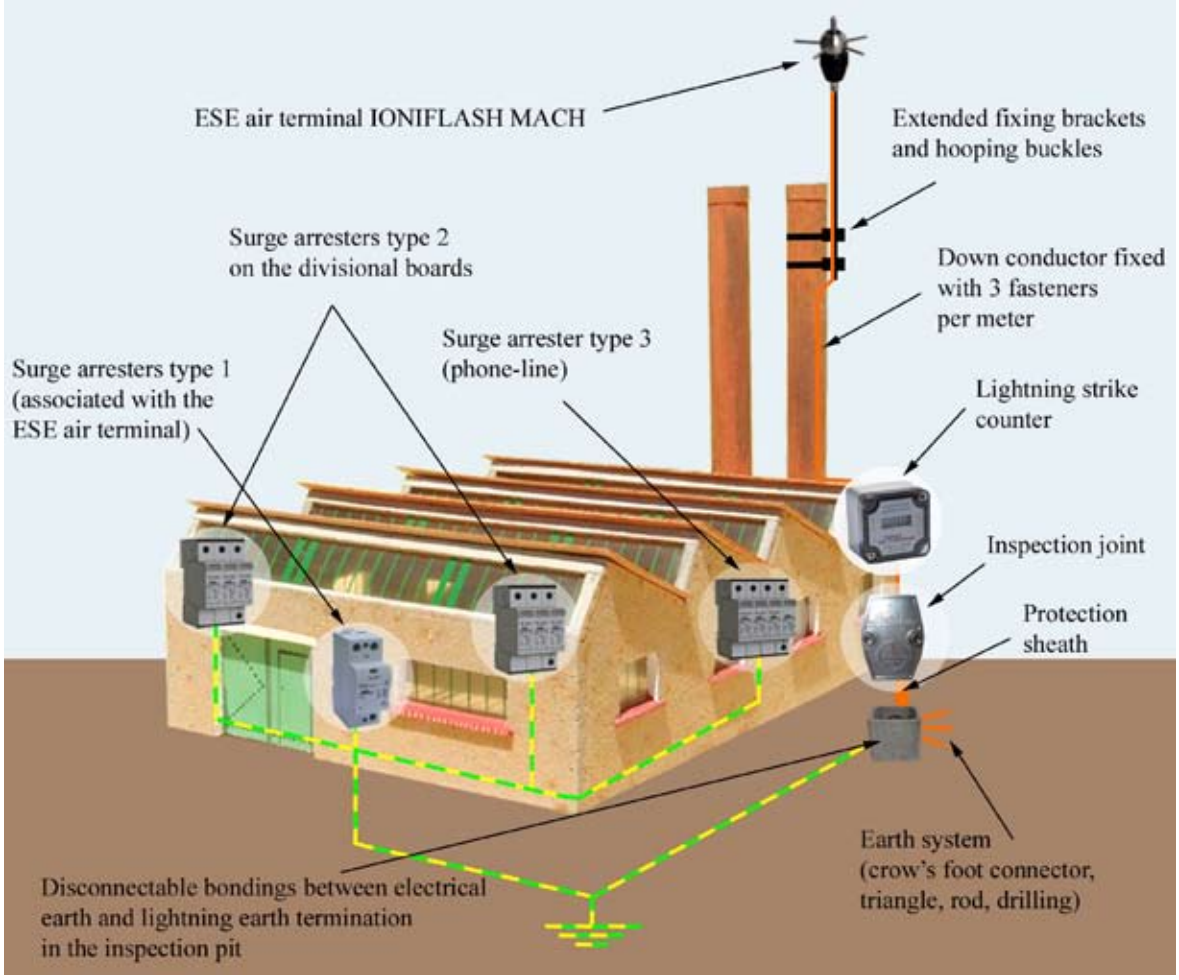

General Information about Lightning

General information about lightning

> The lightning phenomenon

Lightning is a natural phenomenon of disruptive electrostatic discharge which is produced when static electricity accumulates between a cloud and the earth. The different electric potential between the two points can be up to 100 million volts and produces plasma on discharge, causing an explosive expansion in the air through release of heat. When it disperses, this plasma creates both a flash of light (lightning) and a sound (thunder).

Formation of or the arrival of a storm cloud creates an electric field between the cloud and the ground. This electric field increases up to values of 10 kV/m, thus initiating creation of corona discharges from irregularities on the ground or from metal structures (projections).
Lightning between the cloud and the ground is composed of both downward leaders and upward leaders.

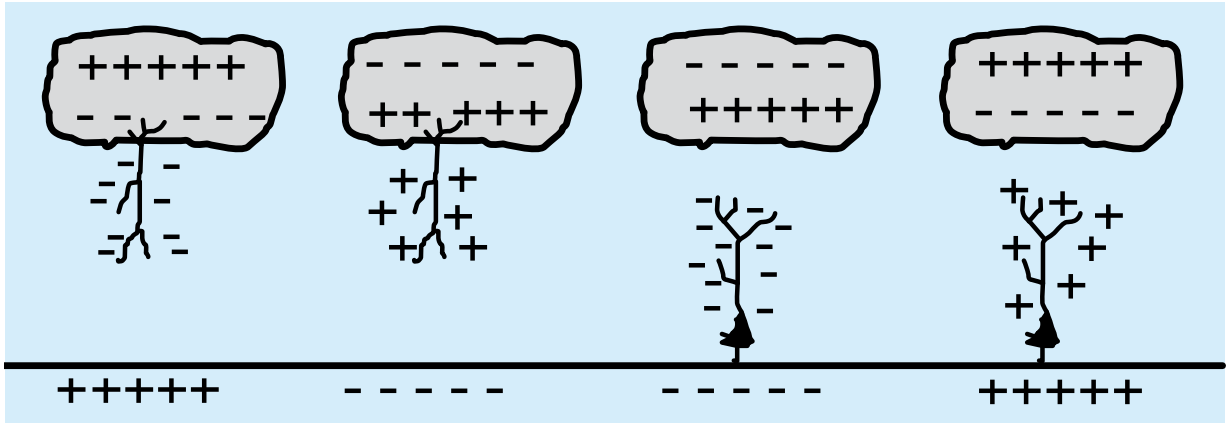

Downward negative leader | **Downward positive leader** | **Upward negative leader** | **Upward positive leader**

The negative downward leader (most frequent case), starts within the negative masses of the cloud.

This leader then propagates downward in a succession of intermittent steps (contrary to the positive leader which travels without stepping) of about ten metres and with pauses of 40 à 100 µs between steps.

As the leader progresses, one can see numerous forks pointing downwards.

General information about lightning

> The lightning phenomenon >

Lightning tends to hit high altitude areas and prominent objects. Thunder may resonate with a sharp cracking sound when the lightning is near and rumble when it is further away. As light travels faster than sound, lightning is visible before the thunder may be heard.

When the electrostatic field is over the dielectric limits of the air (variable depending on humidity and atmospheric pressure), a lightning discharge is produced and accompanied by a sound wave: thunder (produced by the sudden dilatation of air over-heated by the electric arc).

The manufacture of lightning risk protection implicates assessing geographic and climatic conditions to determine the level of exposure to the structure which is to be protected.

The parameters to consider are notably:

- The keraunic level Nk : It expresses the mean annual value of the number of days with storms (days when thunder can be heard in a specific place).
- Density of strike Ng : It indicates the mean value of the number of lightning strikes noted per year and per km².

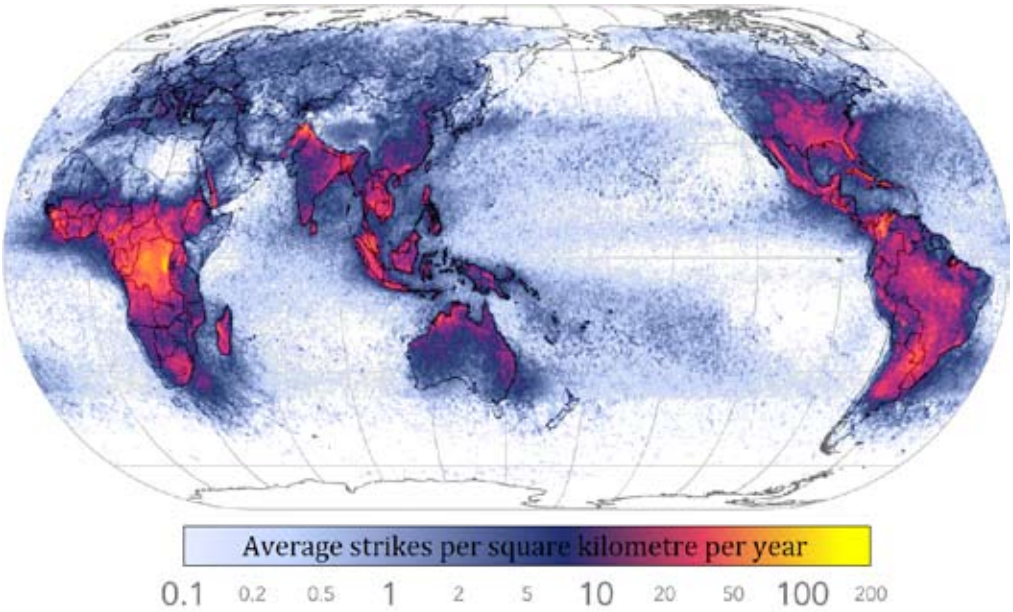

In France, the number of lightning strikes hitting the ground is about a million a year

Although the probability of being hit by lightning is about one in a million, damage caused by lightning per year represents:

- 10 to 30 deaths
- 100 persons struck by lightning
- 20 000 animals hit by lightning
- 20 000 lightning accidents due to lightning, including 15 000 fires
- 50 000 electrical junction boxes destroyed
- 250 steeples destroyed
- 1 billion euros

General information about lightning

> The lightning phenomenon

Without adequate protection, propagation of lightning current can lead to multiple effects which are divided into two main categories: direct and indirect effects:

Direct effects

- **Mechanical Effects** take place when lightning strikes (such as distortion, break-off destruction, ...)
- **Thermal Effets** (or «Joule's law») cause fusion on impact point, or destruction by explosion of the material or even starting of fires.
- **Electrochemical Effects** mean the chemical transformation of materials through electrolytic reactions (negligible, mostly present on earths).
- **Step potential** can provoke burns or cause respiratory failure or cardiac arrest when the lightning current passes through heterogeneous soils.

Indirect effects

- **Overvoltages are conducted** when lightning strikes an electrical line or pylon directly. The current is propagated and reaches all the installations along the line, even several kilometres away from the point of impact.
- **Overvoltages are induced** by electromagnetic radiation of the lightning current on all nearby metal elements. Overvoltages and transient currents thus appear on all equipment which is connected to these elements, with proportional effects depending on the intensity and proximity of the lightning strike.
- **Surges in tension on the earthing systems,** which take place when the current spreads into the ground, provoke damaging tension differences between the mass of the equipment and the networks to which they are connected.
- **Earth potential rise** of non-negligible current from a lightning strike is evacuated by the earth of the air terminal and sent to the earth of the installation.

To reduce and to protect from these different effects (both direct and indirect), it is necessary to have a state-of-the-art Installation for External Lightning Protection System (ELPS) and Interior Lightning Protection System (ILPS), with particular care taken in earthing and interconnections with the conducting elements running alongside the down conductors poles and the electric masses of the installation.

General information about lightning

> The lightning phenomenon >

The detection network for storms at « Météorage » enables to determine the values of the density of lightning strikes over the whole of France.

Depending on the geographical situation, of the type of electrical power supply or the presence or absence of an air terminal, the installation of a protection system against overvoltages may be compulsory as the following table shows:

Type of situation	Nk ≤ 25	Nk >25	At proximity of an installation of the first column
Building equipped with an air terminal	Type 1	Type 1 Compulsory	Not compulsory
Low voltage power supply by a line which is entirely or partially above ground	Compulsory	Type 1 Compulsory	Not compulsory
Safety risk for people	Not compulsory	Type 1 or 2 Compulsory	Not compulsory
Low voltage power supply by a line which is entirely underground	Not compulsory	Type 1 or 2 Compulsory	Not compulsory

Installing a protection system against overvoltages enables to reduce the probabilities of accidents causes by constraints or overvoltages to an acceptable level, thus providing a safe environment for people or property.

When a surge protector device system is not compulsory, a Lightning Risk Analysis can be carried out to justify its installation or not, if costs of material involved and its unavailability are vital to the installation.

General information about lightning

> The lightning phenomenon >

Statutory NV65 were established to fix the values of climatic overvoltages and to provide evaluation methods for the efforts corresponding to a complete building or on its different parts.

In respect with these rules, the **France Paratonnerres** extended poles have been designed to resist in extremely windy conditions without guying.

However, it may sometimes be necessary to check the mechanical strength of the planned installation when a superior level needs to be guaranteed.

France Paratonnerres will then recommend the right and reliable solution by carrying out a detailed study using the appropriate software. Please consult us if you have special requirements.

The map divides France into 5 areas. Each area is then divided into 3 different sites

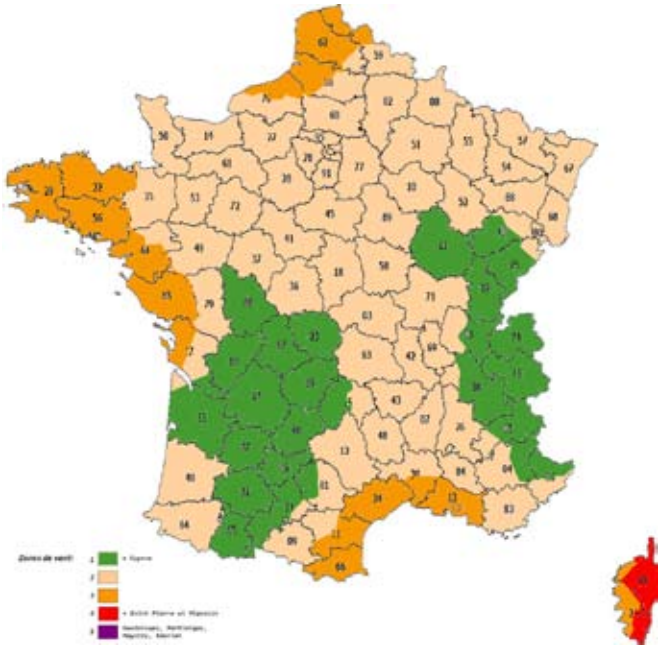

Protected site : hollow area surrounded by hills and therefore protected from winds coming from all directions.

Normal site : wide plain or plateau with few differences in gradient with slopes below 10%.

Exposed site : near the sea: the coast in general (about 6 kms), tops of cliffs, islands or narrow peninsulas.
Inland : narrow valleys where the wind sweeps through; isolated or high mountains and certain mountain passes

Area	Site	Normal pressure (Pa)	Extreme pressure (Pa)	Normal speed (km/h)	Extreme speed (km/h)
Zone 1	Protected	400	700	92	121,7
	Normal	500	875	102,9	136,1
	Exposed	675	1181,3	119,5	158,1
Zone 2	Protected	480	840	100,8	133,3
	Normal	600	1050	112,7	149,1
	Exposed	780	1365	128,5	169,9
Zone 3	Protected	600	1050	112,7	149,1
	Normal	750	1312,5	126	166,6
	Exposed	937,5	1640,6	140,8	186,3
Zone 4	Protected	720	1260	123,4	163,3
	Normal	900	1575	138	182,6
	Exposed	1080	1890	151,2	200
Zone 5	Protected	1200	2100	159,3	210,8
	Normal	1200	2100	159,3	210,8
	Exposed	1440	2520	174,6	230,9

extreme coefficient = 1,75 Air density = 1,225 kg/m3
Reference pressure at 10m above ground level

General information about lightning

> Regulations >

Lightning protection is a domain which is regulated by a large number of standards to which France Paratonnerres adheres to when developing or marketing its many products.

- NF C 17-102 September 2011 edition : Protection contre la foudre :

This standard describes the set up regulations for the protection of structures and open zones against direct lightning strikes by Early Streamer Emission (E.S.E.) Air Terminal.

It gives the rules relative to conception, manufacture, verification and maintenance of installations made using E.S.E. Air Terminals.

This standard basically describes the E.S.E. Air Terminal product and gives test procedures to be carried out

- NF C 15-100 : Low voltage electrical installations :

This standard is applicable to all electrical installations with a power supply of below or equal to 1000V alternative current and to 1500V continuous current.

This document lists the rules for design and creation of electrical installations which are to be applied to ensure correct working conditions and safety.

Articles 443 and 534.1 describe more particularly protection measures against voltage and electromagnetic variations.

- EN 61643-11 : Low voltage surge protector devices – surge protector devices connected to low voltage distribution networks – Requirements and tests :
– Exigence et essais :

This standard describes the requirements and tests enabling characterisation of surge protector devices connected to low voltage distribution networks.

- IEC 62561 : Lightning Protection Components :

This series of standards is a « product » standard describing the technical characteristics which the various components for protection against lightning have to respect. The series is divided into 7 standardised volumes for different products:

- **IEC 62561-1 :** Requirements for connection components
- **IEC 62561-2 :** Requirements for conductors and earth electrodes
- **IEC 62561-3 :** Requirements for isolating spark gaps
- **IEC 62561-4 :** Requirements for conductor fastenings
- **IEC 62561-5 :** Requirements for earth electrode inspection housings and earth electrode seals
- **IEC 62561-6 :** Requirements for lightning strike counters
- **IEC 62561-7 :** Requirements for earth enhancing compounds

General information about lightning

> Regulations >

- EN 62305 : Protection against lightning :

This series of standards is divided into 4 volumes and first explains the general principles of lightning, then a gives a method for the evaluation of risks. The third volume describes the rules for the installation of lightning protection systems protecting people and buildings; the final volume proposes protection measures to reduce the risks of network and communication failure:

- **IEC/EN 62305-1 :** General principles
- **IEC/EN 62305-2 :** Risk evaluation
- **IEC/EN 62305-3 :** Physical damage to structures and life hazard
- **IEC/EN 62305-4 :** Electrical and electronic systems within structures

- FDC 17-108 : Simplified Lightning Risk Analysis :

This document is a guide offering a simplified method to analyse lightning risks. The method is inspired from the full lightning risk analysis described in **EN 62305-2**. The method is described as being simplified because it only contains a limited number of parameters compared to the full method. It is therefore only applicable for structures where:

- No explosive product or atmosphere is present
- No danger for the environment is present
- Fire risk is low or ordinary
- Fire risk is high but risk of panic is low

- UTE C 15-712 : Photovoltaic Installations :

This document is a guide describing the rules for installing photovoltaic generators connected to the low voltage public distribution network and not designed to work autonomously.

It also gives the rules for the installation of AC and DC surge protector devices providing protection for overcurrents and overvoltages.

- UTE C 15-443 : Protection of low voltage electrical installations against overvoltages of atmospheric origin or due to manoeuvres. Choice and installation of surge protector devices.

This practical guide indicates conditions relative to the choice and the implementation of surge protector devices in low voltage installations. It details and completes articles **443** and **534.1** of standard **NF C 15-100.**

Notes

Notes

Non-contractual catalogue and pictures

2018 - FRANCE PARATONNERRES

FRANCE PARATONNERRES, A WORLD-WIDE COMPANY

40 YEARS OF EXPERIENCE WITH PRESTIGIOUS REFERENCES

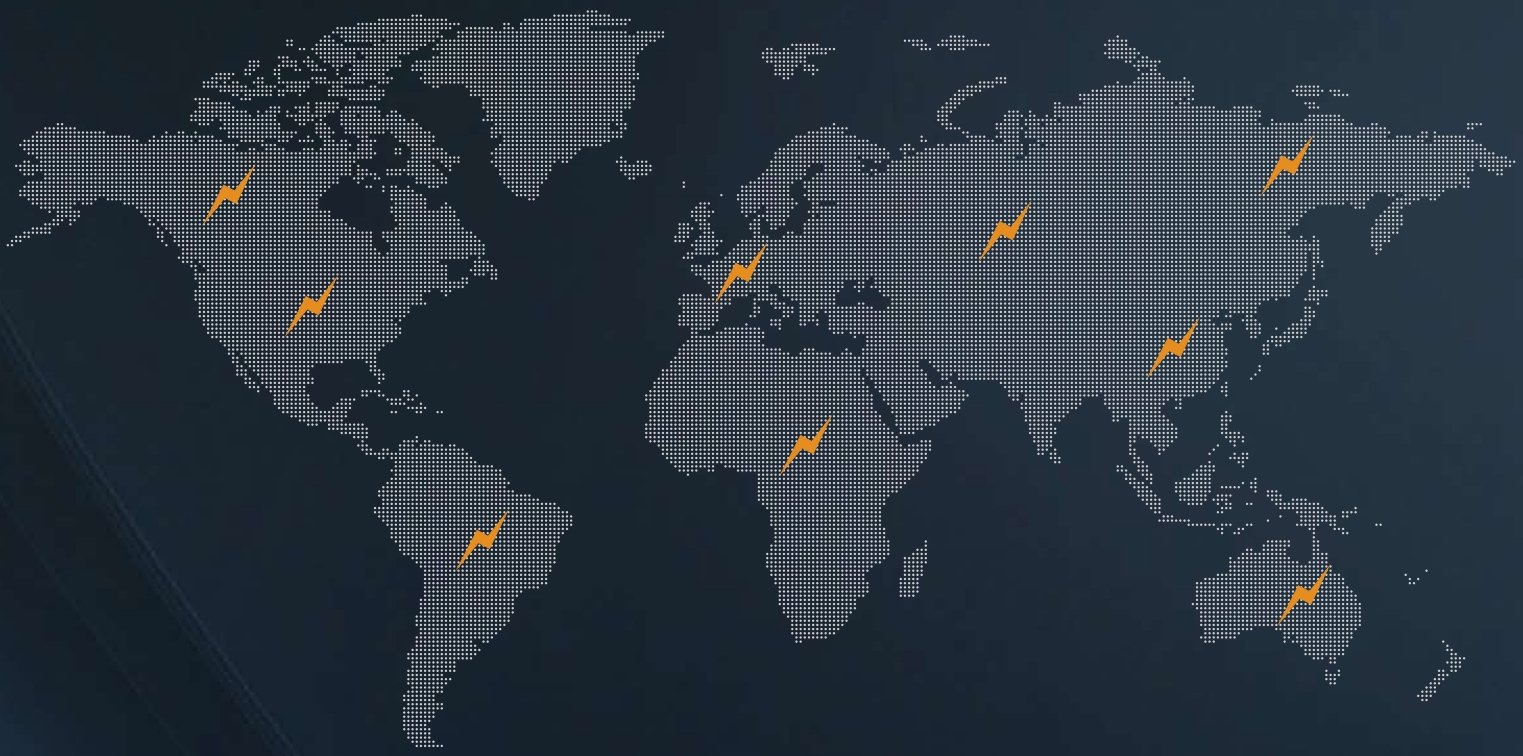

FRANCE PARATONNERRES®

CONTACT US

Parc Ester Technopole
9, rue Columbia
87068 LIMOGES
FRANCE
T. +33 (0) 555 575 253
F. +33 (0) 555 358 562
contact@france-paratonnerres.com
www.france-paratonnerres.com
www.ioniflash.com

GEOGRAPHIC LOCATION

France Paratonnerres is located in Limoges (87) at
1 hour from Paris by plane and 3 hours from Paris by train

Conception and graphicdesign - SNDsign - 06 11 49 45 75